OPERATING INSTRUCTIONS

MODEL 1000 B

INTEGRATED XENON LAMPHOUSE

AND POWER SUPPLY

Optical Radiation Corporation

A-P 0027

OPERATING INSTRUCTIONS

MODEL 1000 B
INTEGRATED XENON LAMPHOUSE
AND POWER SUPPLY

FOR OPERATION IN 230 VAC, 50/60 HZ

Optical Radiation Corporation
6352 N. Irwindale Avenue, Azusa, California 91702 • (213) 969-3344

REVISED JANUARY 1973

TABLE OF CONTENTS

LIST OF ILLUSTRATIONS/DRAWINGS

LIST OF TABLES

CAUTION/WARNINGS

The following definitions apply to WARNINGS, CAUTIONS and NOTES found throughout this manual.

WARNING

INSTALLATION, OPERATION AND MAINTENANCE PROCEDURES, PRACTICES, ETC., WHICH WILL RESULT IN PERSONNEL INJURY OR LOSS OF LIFE IF NOT CAREFULLY FOLLOWED.

CAUTION

INSTALLATION, OPERATING AND MAINTENANCE PROCEDURES, PRACTICES, ETC., WHICH WILL RESULT IN DAMAGE TO EQUIPMENT IF NOT CAREFULLY FOLLOWED.

NOTE

Installation, operating and maintenance procedures, practices, etc., which are essential to emphasize.

SECTION 1 - INTRODUCTION

1-1 GENERAL

This technical manual provides installation, operation and maintenance instructions for the ORCON Xenon Light Projection System, Model 1000B. The system is manufactured by Optical Radiation Corporation (ORC), Azusa, California, and is fully compatible with any 35mm or 16mm motion picture projection system. When requesting information concerning the system, always furnish Serial and Model Numbers.

WARNING

BE SURE TO READ ALL THE INSTRUCTIONS BEFORE ATTEMPTING TO OPERATE THE LAMPHOUSE. DAMAGE TO EQUIPMENT OR INJURY TO PERSONNEL MAY RESULT IF ALL INSTRUCTIONS ARE NOT CAREFULLY FOLLOWED.

WARNING

DO NOT REMOVE XENON BULB FROM PROTECTIVE CONTAINER UNTIL READY FOR INSTALLATION. THE XENON BULB IS HIGHLY PRESSURIZED AND SUBJECT TO POSSIBLE RUPTURE.

1-2 DESCRIPTION/SPECIFICATIONS (See Figure 1-1 and Table 1-1)

The ORCON Model 1000B is uniquely designed with the lamphouse and power supply integrated into the same package. This eliminates the need for hook-up and location of an external power supply. The system is specifically designed and optimized for use with 35mm or 16mm motion picture projectors. It operates from 230 VAC single phase power source and draws a maximum of 10 amps input current. The system is equipped with an 8 foot long power cord with a standard UL 15 amp, 230 VAC 3 prong plug. It is designed to operate with both the X1000 and X1600 xenon bulbs. The integrated system has DC current regulation in the order of 1% which maintains a current setting independent of line voltage fluctuations. This high degree of current regulation provides a constant screen brightness for optimum projection quality. In addition to current regulation, the system is filtered to provide less than 1% RMS current ripple. This current ripple factor provides optimum lamp life and flickerless operation. Input current can be continuously adjusted by means of a potentiometer on the rear panel of the lamphouse. Current range is from 15 to 40 amps. This current adjustment is accomplished by controlling the firing angle of a pair of triacs on the primary side of the power isolation transformer. A current feedback sensing circuit is included to maintain the firing angle of the triacs constant at the corresponding current setting, thus providing current regulation.

Ignition of the lamp is a one-switch operation. When the "power on" circuit breaker is actuated, the fans start and power is provided to establish the necessary DC open circuit voltage across the xenon bulb. The value of open circuit voltage is approximately 120 VDC. When the proper value of voltage is reached, the high voltage RF ignition circuit is triggered and the xenon gas between the electrodes is ionized. After ionization occurs, the

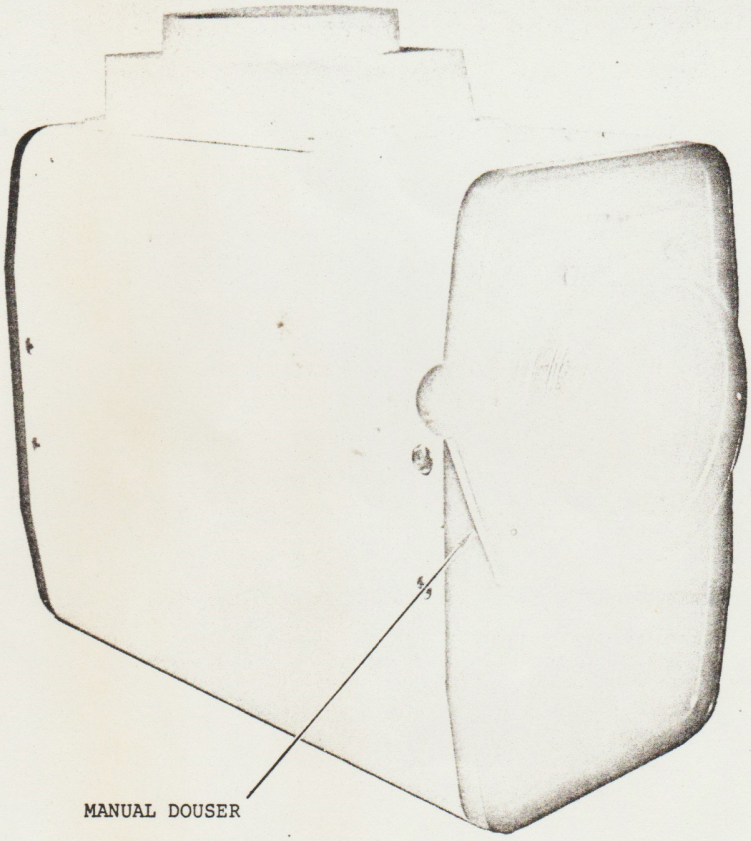

Front View

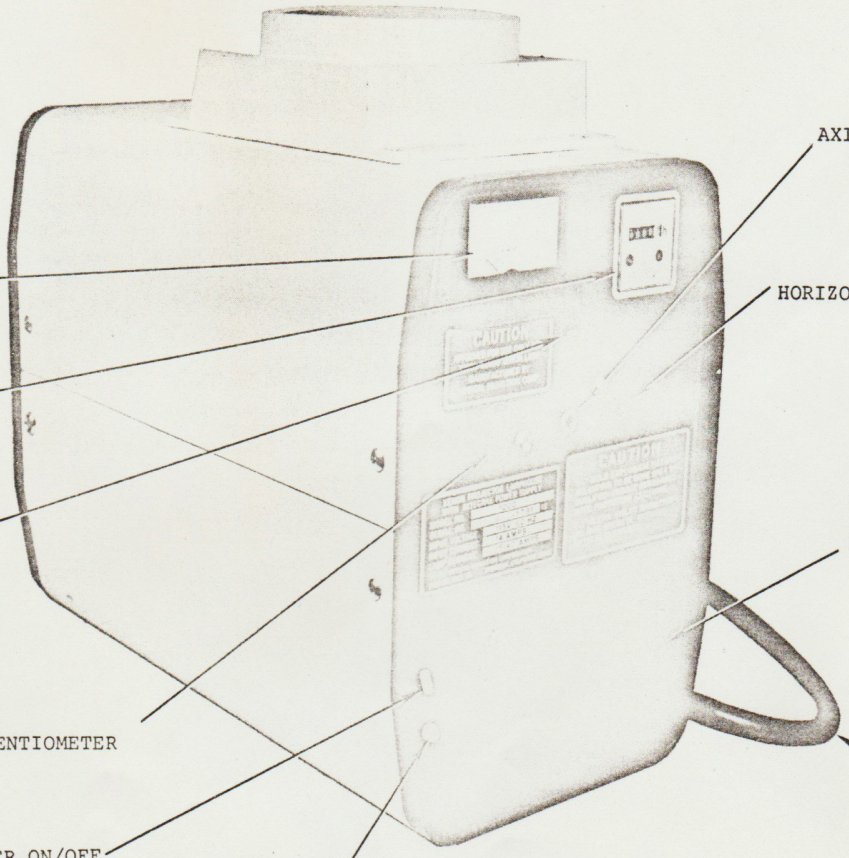

Rear View

Figure 1-1. Model 1000B Xenon Lamphouse/Power Supply

power source provides the necessary back-up DC voltage for sustained bulb operation. The ignition time after actuation of the main switch is 4 seconds. An interlock switch is provided to extinguish the bulb if the top access cover is not properly in place.

A 1/4 amp circuit breaker is provided on the back panel. The 15 amp circuit breaker (an on/off switch-type) disrupts AC power to the system if an overload condition exists. The 1/4 amp circuit breaker is for ignitor circuit protection. The breakers must be manually reset if an overload occurs. A 1/4 amp fuse is also provided to protect the control circuit in case of an overload. A thermal switch, set at 160°F, is mounted on the SCR heat sink to protect the triacs from operating beyond the recommended temperature range. If an excessive temperature occurs, the bulb will extinguish and automatically re-ignite when a safe operating temperature is reached.

The power source consists of three main subassemblies: The transformer rectifier, the triac board, and the control board. For ease of maintenance, plug in circuit boards are used and are easily accessible for service when the top cover is removed. The transformer rectifier assembly is located in the lower portion of the lamphouse, and can be removed by loosening 4 screws on the bottom of the lamphouse. The system is modular in design and internal connections are provided so that the unit can be easily disassembled for maintenance.

The system is equipped with an ammeter so that an accurate current setting can be accomplished. An elapsed time indicator is also provided so that the number of operational hours on the lamp can be monitored, and the lamp warranty data can be accurately maintained.

A manual douser, three axis lamp adjustment and an aspheric reflector are also incorporated into the system. The aspheric reflector has been specially designed by advanced computer techniques to provide the maximum light energy transfer through the projection aperture while maintaining the highest quality of brightness distribution on the screen. The brightness distribution on the screen is free of any hot spots and has a gradual fall-off from center to edge. The distribution is in the order of 80 to 85% when properly aligned.

A self contained forced air cooling system is incorporated in the lamphouse to provide the proper environmental condition for safe temperature operation of the lamp and critical electronic components. In addition, the xenon bulb is ozone free and does not require venting to the outside.

Table 1-1
General Specifications

Current Range	Open Circuit Volts	AC Voltage	Input Current	Approx. Weight		Dimension In Inches
				Net	Ship	
15-40 Amps DC	120	230 50 Hz	10	85	95	16½ High 9¼ Wide 18 Long

1-3 ACCESSORIES

1-4 Focus Tool

The focus tool is a hex head wrench with a handle, especially designed for focusing the projector lamphouse.

1-5 Xenon Bulb Installation/Removal Tool

The protective bulb installation/removal tool is a cylindrical transparent device which fits over the bulb at the front of the projector lamphouse. It is constructed so that bulb removal and replace-

ment can be easily accomplished without physically handling the bulb. Bulb mounting hardware is contained within the heavy-duty bulb removal tool.

1-6 Allen Wrenches

A 9/64 Allen wrench is provided to aid in tightening the anode connector in the lamphouse. The 1/8 Allen wrench is used for removing the collar from around the xenon bulb.

1-7 Mounting Plate

For 35mm projection, it is recommended that an optional swivel mounting plate be used. This mounting plate attaches to the bottom of the lamphouse and provides the standard 9-inch optical centerline. The lamp focus tool is used to remove the indexing bolt on the rear of the plate for swiveling out of the way. This is extremely helpful for installation, bulb replacement, and lamphouse maintenance.

SECTION 2 - INSTALLATION

2-1 RECEIVING-HANDLING

Remove all packing material from around the unit and carefully inspect for damage which may have been caused by shipping. Any claims for loss or damage that may have occurred in transit must be filed by the buyer with the carrier. Copy of bill of lading and freight bill will be furnished upon request if required. Table 2-1 is a list of installation hardware included with each lamphouse.

Table 2-1. Installation Hardware

1 each	3/16 Plat-T-Key
1 each	9/64 Allen Hex Key (Short Arm) Bulb anode connector
1 each	1/8 Allen Hex Key (Short Arm)
4 each	1/4-20 x 2" Flathead Screws
4 each	1/4 SAE Flat Washers
4 each	1/4 Lock Washers
4 each	1/4-20 Hex Nuts
1 each	1/4 Xcelite No. 8 (Special Tool)

2-2 MECHANICAL INSTALLATION

Installation of the ORCON lamphouse will vary with the type of projection system used. Individual conversion kits are available for installing the lamphouse to any projection system. Instructions for installing lamphouse are included with the conversion kit. See paragraph 2-8 for procedure for installing lamphouse to standard 35mm motion picture projector.

2-3 ELECTRICAL HOOKUP, POWER SUPPLY

The Model 1000B is factory wired for 230 VAC operation. All that is required for operation is to plug the power cord into a 230 VAC 15 amp power source.

2-4 INSTALLATION OF DICHROIC FILTER (See Drawing 1141036-3)

NOTE

Applies to Model 1000-16 for 16mm projection only.

The dichroic filter should be installed before installing the bulb. This is accomplished as follows:

a. Remove filter holder (item 1) from front bulkhead of lamphouse.

CAUTION

WEAR WHITE COTTON OR LINEN GLOVES WHENEVER HANDLING FILTER GLASS. FINGER CONTACT WITH GLASS SURFACE WILL LEAVE BODY OIL MARKS WHICH WILL IMPAIR PERFORMANCE AND CAUSE FRACTURE OF THE GLASS AS A RESULT OF HEAT SPOTS CAUSED BY LOCAL ABSORPTION OF THE ENERGY FROM THE LIGHT SOURCE.

b. While holding filter glass at an angle in a bright light, observe for any unusual stains. If stains are noticed, clean with a mild hand soap and water or an ammonia base household cleaner in an aerosol can. Rinse well with cold water and dry with Kleenex or equivalent.

c. Set filter holder on bench (or equivalent) with large diameter resting on bench surface.

d. Remove clips (Item 6) and screws (Item 8). Filter segments (Item 3) should be installed with coated side facing light source. A black mark is painted on the uncoated side of the filter and should face towards the projector when installed.

e. Slide both filters in place, install retainers (Item 7) and tighten retainer screws (Item 9).

f. Install clips (Item 6) and tighten clip screws (Item 8).

g. Mount assembly to front bulkhead of lamphouse.

2-5 INSTALLATION OF NEGATIVE LENS (See Drawing 1141036-1)

NOTE

Applies to Model 1000-35 for 35mm projection only.

The negative lens should be installed before installing the bulb. This is accomplished as follows:

a. Remove filter holder (Item 1) from front bulkhead of lamphouse.

CAUTION

WEAR WHITE COTTON OR LINEN GLOVES WHENEVER HANDLING FILTER GLASS. FINGER CONTACT WITH GLASS SURFACE WILL LEAVE BODY OIL MARKS WHICH WILL IMPAIR PERFORMANCE AND CAUSE FRACTURE OF THE GLASS AS A RESULT OF HEAT SPOTS CAUSED BY LOCAL ABSORPTION OF THE ENERGY FROM THE LIGHT SOURCE.

b. While holding negative lens at an angle in a bright light, observe for any unusual stains. If stains are noticed, clean with a mild hand soap and water or an ammonia base household cleaner in an aerosol can. Rinse well with cold water and dry with Kleenex or equivalent.

c. Set filter holder on bench or equivalent with small diameter resting on bench surface.

d. Wrap gasket (Item 13) around outer edge of negative lens (Item 11). Insert negative lens with gasket into filter holder. Flat side of negative lens should be facing up (towards lamphouse).

e. Mount assembly to front bulkhead of lamphouse.

2-6 INSTALLATION OF LAMPHOUSE TO MOUNTING PLATE (35mm PROJECTORS)

The ORCON Mounting Plate (MP) should be used in all 35mm projector installations. The plate is designed to simplify the initial installation and to provide speedy bulb replacement when required. Install the mounting plate and lamphouse on the projector pedestal as follows (see figure 2-1):

a. Remove two 1/4-20 x 3/4 LG flat head screws which secure plates together during shipment.

b. Insert four 1/4-20 x 2" Allen flat head screws through lower base plate.

c. Lay lower base plate on pedestal allowing screws to protrude into pedestal base.

d. Install four 1/4" flat washers and four 1/4" lock washers onto bolts and secure with four 1/4-20 nuts. Nuts should be finger tight only so that lower base plate can be moved freely back and forth within the channels of the projector base.

e. Normally, when ordered, the upper base plate is shipped installed to the lamphouse. If not installed, assemble the upper base plate to the bottom of the ORCON lamphouse using four 10-32 x 5/8" flat head screws, and tighten securely.

f. Place the assembled lamphouse and upper base plate carefully onto the locating stud on the lower plate and temporarily insert the 5/16" x 3/8" Allen shoulder screw through the upper plate, into the threaded hole on the lower plate.

g. After optical alignment has been accomplished, (see Section 4) tighten all nuts securely.

NOTE

Once base plate is secured, it will never have to be adjusted during the life of the installation.

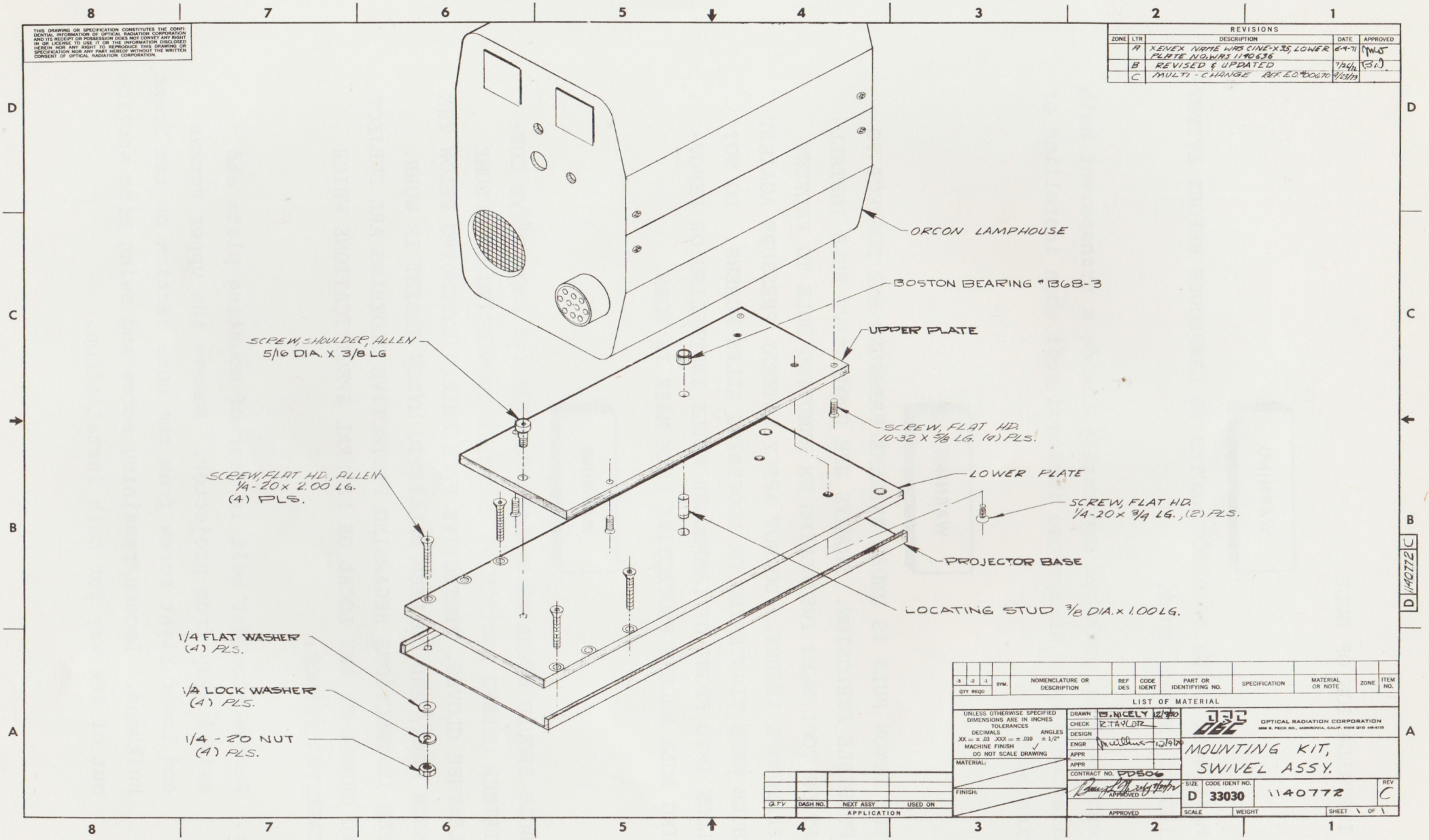

Figure 2-1. 35mm Mounting Kit Swivel Assembly

2-7 INSTALLATION OF BULB

WARNING

MAKE SURE POWER IS DISCONNECTED TO LAMPHOUSE BEFORE ATTEMPING TO INSTALL BULB.

The xenon bulb is packaged separately inside a transparent bulb installation tool. Always use included tool when installing or removing bulb.

WARNING

THE XENON BULB IS UNDER EXTREME PRESSURE AND SUBJECT TO POSSIBLE EXPLOSION. ALWAYS USE PROTECTIVE BULB INSTALLATION TOOL WHEN INSTALLING OR REMOVING BULB TO PREVENT PERSONNEL INJURY. DO NOT APPLY LATERAL PRESSURE AGAINST BULB WHEN TIGHTENING OR LOOSENING ALLEN SCREWS. DO NOT LOOK INTO FRONT OF LAMPHOUSE WHILE INSTALLING OR REMOVING BULB UNLESS PROTECTIVE FACE MASK IS WORN.

WARNING

BULB SHOULD NEVER BE HANDLED OUTSIDE ITS PROTECTIVE CONTAINER UNLESS PROTECTIVE CLOTHING CONSISTING OF CHROME LEATHER GLOVES, PROTECTIVE FACE SHIELD EXTENDING BELOW THE NECK AREA, AND QUILTED BALLISTIC NYLON JACKET IS WORN. THE INSTRUCTIONS REGARDING PROTECTIVE CLOTHING ARE SUBJECT TO CHANGE BY ANY LOCAL OR FEDERAL SPECIFICATIONS WHICH TAKE PRECEDENCE.

a. Remove shoulder bolt in rear of mounting plate and swivel away from projector. Remove the upper screws and lower right screw from the nose section on the front bulkhead. Loosen remaining screw and swing nose section out of the way for bulb installation.

b. Remove thumb screw and red plastic end cap from cathode end of bulb installation/removal tool (containing xenon bulb).

c. Insert bulb installation/removal tool (containing bulb) through opening in mirror, and screw bulb into receptacle until it is seated firmly against mating surface.

d. Remove collar holding bulb installation/removal tool to anode end of bulb, using a 1/8" Allen wrench.

e. Remove bulb installation/removal tool from bulb without viewing bare bulb and without exerting bending pressure on the bulb.

f. Connect the anode connection over the anode stud of the bulb and carefully tighten the socket screws on the connection with a 9/64" Allen wrench. Support the end of the bulb with one hand while tightening so that lateral pressure is not applied on the bulb.

CAUTION

MAKE SURE FRONT LEAD FROM BLACK TRANSFORMER TO BULB IS NOT TOUCHING ANY PART OF MIRROR OR SHUTTER, OR HIGH VOLTAGE ARCING AND SHORTING MAY OCCUR. MAKE SURE PVC AIR TUBES ARE POINTED TOWARD THE BOTTOM OF THE BULB CONNECTION.

g. Swing front nose section back into place and secure with four screws.

SECTION 3 - OPERATIONS

3-1 START-UP

The following is the procedure for operating the system:

CAUTION

MAKE SURE AIR FLOW INLET AND EXHAUST ARE NOT RESTRICTED. THE THERMAL SWITCH ON THE SCR HEAT SINK WILL SHUT OFF SYSTEM IF ADEQUATE AIR FLOW IS NOT AVAILABLE.

a. Hook up power cord to a 230 VAC power source.
b. Adjust current adjust potentiometer, located on rear panel of lamphouse, to 70% for initial start-up.
c. Activate main switch on lamphouse to "ON" position. Bulb will automatically ignite.

NOTE

If upper wrap is not secured on lamphouse, bulb will not ignite. The lamphouse upper wrap must be secured in order to activate the interlock switch.

Current to the Model 1000B system with an X1000 bulb installed should not exceed 35 amps, and with an X1600 bulb should not exceed 40 amps. If starting current exceeds the above values, adjust the current adjust potentiometer CCW until the desired value is reached. Monitor bulb current on ammeter at rear of lamphouse.

The nominal current after warm-up for the X1000 bulb is 35 amps, and for the X1600 bulb, 40 amps. The range of adjustment is approximately 15 to 35 amps for the X1000 bulb and 17 to 40 amps for the X1600 bulb. The X1000 and X1600 bulbs can run continuously at current levels of 35 amps and 40 amps respectively.

3-2 SHUT-DOWN

To shut-down the system, position main switch on rear of lamphouse to "OFF". Bulb will extinguish and power supply will be de-energized.

WARNING

IF XENON BULB IS TO BE REMOVED AFTER SHUT-DOWN, ALLOW BULB TO COOL FOR 15 MINUTES BEFORE REMOVING

Start-up can be accomplished immediately after shut-down if required without damage to the equipment.

CAUTION

FILM IN PROJECTOR MAY BURN IF PROJECTOR IS STOPPED WHILE LAMPHOUSE IS ENERGIZED. ANY TIME PROJECTOR IS STOPPED, CLOSE LAMPHOUSE DOUSER FIRST FOR FILM PROTECTION.

SECTION 4 - OPTICAL ALIGNMENT

4-1 GENERAL

The optical alignment of the system can be easily accomplished once the lamphouse is positioned properly with respect to the optical axis of the projection lens. In general, the following setup is the same for 16mm or 35mm projectors.

4-2 ALIGNMENT PROCEDURE

NOTE

No optical alignment tools or devices are required if the following instructions are carefully followed.

a. Remove the hex head bolt from the upper mounting plate, and swivel lamphouse and upper base plate around so that it is at a right angle to the direction of the screen.

b. Turn on the lamphouse and open the douser to direct the light from the lamphouse onto the side wall of the projection room.

c. Insert the focusing tool into the center adjustment hole (focus adjust, see figure 1-2) and turn counterclockwise until the light pattern on the wall resembles a target with a dark "bullseye" in the center surrounded by gray rings (see figure 4-1).

d. Close the lamphouse douser and swing the lamp into its normal operating position on the projector pedestal with the front bulkhead of the lamphouse approximately 8 to 8½ inches from the aperture plate of the projector (16mm is 6 3/4 to 7¼ inches) (see figure 4-2).

e. Remove the projector lens; start the projector and open the lamphouse douser and the changeover douser.

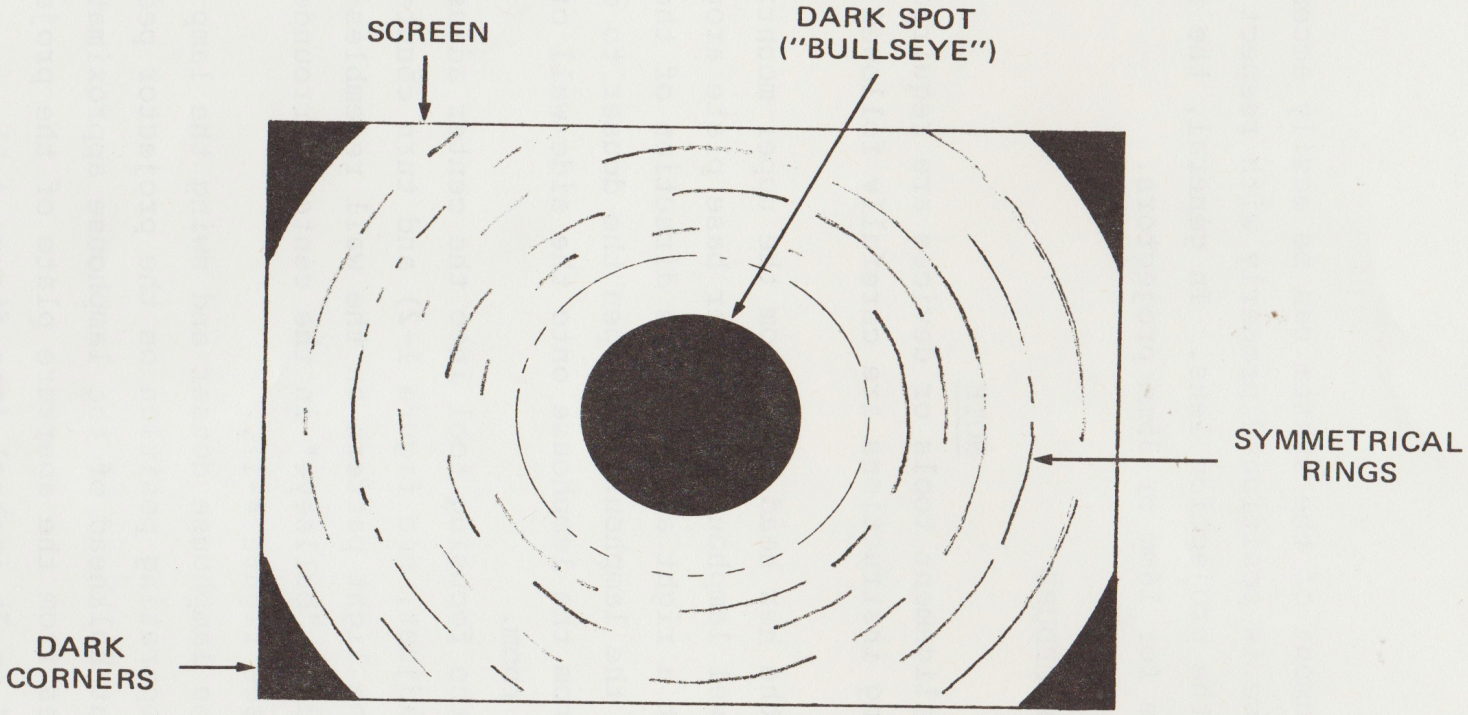

Figure 4-1. Typical "Bullseye" Pattern

f. The "target" pattern should now appear on the screen. Center the "bullseye" by physically moving the lamphouse table on the projector pedestal up or down as required. If no adjustment is provided, it may be necessary to place shim washers between the lower base plate and the lamphouse table until the desired height is established.

g. Insert projection lens in projector and adjust center focusing adjustment to obtain well defined "bullseye" and circular rings.

CAUTION

DO NOT ALLOW LIGHT FROM LAMPHOUSE TO STRIKE THE PROJECTION LENS FOR MORE THAN A FEW SECONDS AT A TIME. OPEN THE LAMPHOUSE DOUSER, MAKE AN ADJUSTMENT WHILE OBSERVING THE RESULTS ON THE SCREEN AND THEN CLOSE THE DOUSER TO PERMIT THE LENS TO COOL. PROLONGED EXPOSURE OF THE LENS TO THE INTENSE LIGHT FROM THE LAMPHOUSE WITHOUT FILM BEING RUN THROUGH THE PROJECTOR CAN DAMAGE THE LENS.

h. When a uniform target pattern has been achieved, back off the center focusing adjustment until the "bullseye" disappears and even light distribution fills the entire screen except for the four corners.

i. The four dark corners should be of equal size. If not, position the lamphouse until they are.

NOTE

If precise centering of the "bullseye" cannot be obtained by moving the lamphouse, move the vertical and lateral bulb adjustments (see figure 1-2) on the lamphouse to move the light beam up and down or sideways.

J. Back off the focus adjustment until the screen is filled with light, evenly distributed, with no dark corners.

Bauer opt. height 9"

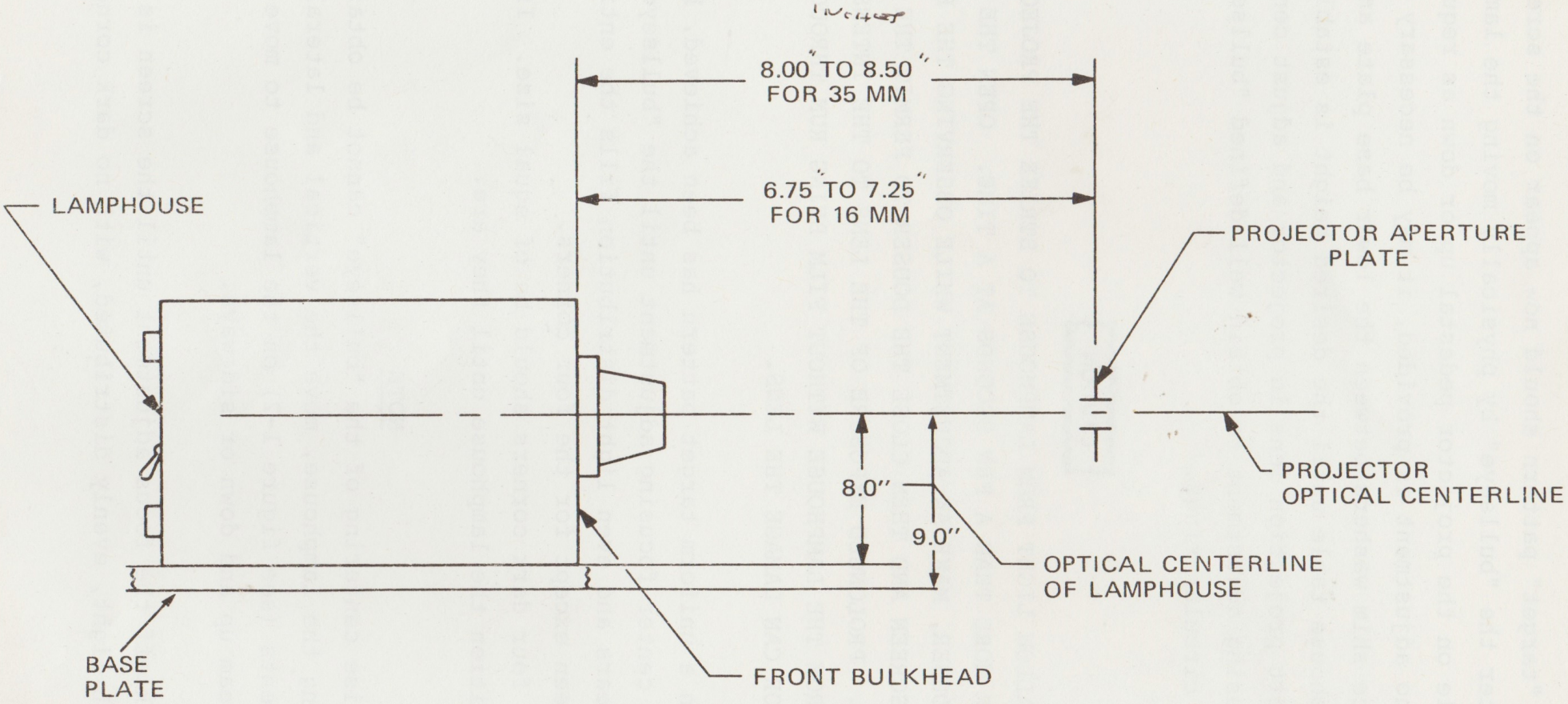

Figure 4-2. Lamphouse/Projector Alignment

k. Tighten the four bolts that fasten the lamphouse base to the pedestal.

NOTE

Once the system is properly aligned, no adjustments will be necessary until a new bulb is installed. After installation of a new bulb, adjusting the three lamp focus adjustments is all that is required to again achieve optimum alignment.

WARNING

BEFORE ATTEMPTING TO CHANGE PARTS OR MAKE REPAIRS, BE SURE THAT THE POWER CORD IS DISCONNECTED FROM THE POWER SOURCE.

WARNING

CAUTION SHOULD BE EXERCISED IN TAKING VOLTAGE MEASUREMENTS WHEN TROUBLE SHOOTING THE UNIT. ALWAYS AVOID CONTACT BETWEEN ANY PART OF THE HUMAN BODY AND ANY CURRENT CARRYING PART OF THE POWER SOURCE.

5-1 FAN MOTOR

The fan motor is manufactured with lifetime lubricated bearings and no maintenance is required.

5-2 CONNECTORS

Electrical connections (i.e., circuit boards and connectors) should be checked periodically to ensure good contact and eliminate any possible heating at contact areas.

5-3 CLEANING POWER SUPPLY

Periodically remove the top cover and blow out the lamphouse using clean, dry compressed air.

5-4 CLEANING OPTICS

It is recommended that at least twice annually the reflector and negative lens be cleaned to maintain high screen brightness. In cleaning the optics, the following steps should be taken:

a. Remove bulb from lamphouse as described in paragraph 5-5.
b. With a soft bristled brush, gently brush larger particles off the optics surface.

c. Clean optics with a mild hand soap and water or an ammonia base household cleaner in an aerosol can. Rinse well with cold water (if cleaned with soap and water) and dry (or wipe) with Kleenex or equivalent.

5-5 REPLACEMENT OF BULB

WARNING

BEFORE REMOVING XENON BULB, ALLOW 15 MINUTES TO COOL DOWN. WHEN HOT, BULB IS UNDER HIGHER INTERNAL PRESSURE AND MORE SUBJECT TO EXPLOSION.

a. Loosen shoulder bolt in baseplate at rear of lamphouse (if 35mm installation) and swing lamphouse nose away from projector.

b. Remove the upper screws and lower left screw from adapter on front bulkhead. Loosen lower right screw. Adapter will swing out of the way for bulb removal.

WARNING

THE XENON BULB IS UNDER EXTREME PRESSURE AND SUBJECT TO POSSIBLE EXPLOSION. ALWAYS USE PROTECTIVE BULB INSTALLATION TOOL WHEN INSTALLING OR REMOVING BULB TO PREVENT PERSONNEL INJURY. DO NOT APPLY LATERAL PRESSURE AGAINST BULB WHEN TIGHTENING OR LOOSENING ALLEN SCREWS. DO NOT LOOK INTO FRONT OF LAMPHOUSE WHILE INSTALLING OR REMOVING BULB UNLESS PROTECTIVE FACE MASK IS WORN.

WARNING

BULB SHOULD NEVER BE HANDLED OUTSIDE ITS PROTECTIVE CONTAINER UNLESS PROTECTIVE CLOTHING CONSISTING OF LEATHER GLOVES PRO-

TECTIVE FACE SHIELD EXTENDING BELOW THE NECK AREA, AND QUILTED BALLISTIC NYLON JACKET IS WORN. THE INSTRUCTIONS REGARDING PROTECTIVE CLOTHING ARE SUBJECT TO CHANGE BY ANY LOCAL OR FEDERAL SPECIFICATIONS WHICH TAKE PRECEDENCE.

c. Loosen and remove fitting on front of bulb.

d. Insert bulb installation/removal tool over bulb; unscrew and remove bulb from lamphouse and return to Optical Radiation Corporation for replacement along with bulb warranty claim form.

WARNING

BULB IS UNDER EXTREME INTERNAL PRESSURE. DO NOT REMOVE FROM PROTECTIVE CONTAINER.

e. Insert new bulb with furnished bulb installation/removal tool, and secure front electrical connections with Allen tool provided. See paragraph 2-7 for instructions.

f. Swing nose of lamphouse back into position and secure lamphouse to base plate.

g. Align the lamp as described in Section 4.

NOTE

Do NOT loosen lamp base plate on projection pedestal since the lamphouse mirror is optically aligned with the centerline of the projection lens.

5-6 TROUBLE SHOOTING

Whenever lamphouse fails to operate properly, consult wiring diagram, figure 5-1, Trouble Shooting Chart table 5-1, voltage chart table 5-2 and resistance test points table 5-3 as an aid in locating the possible trouble.

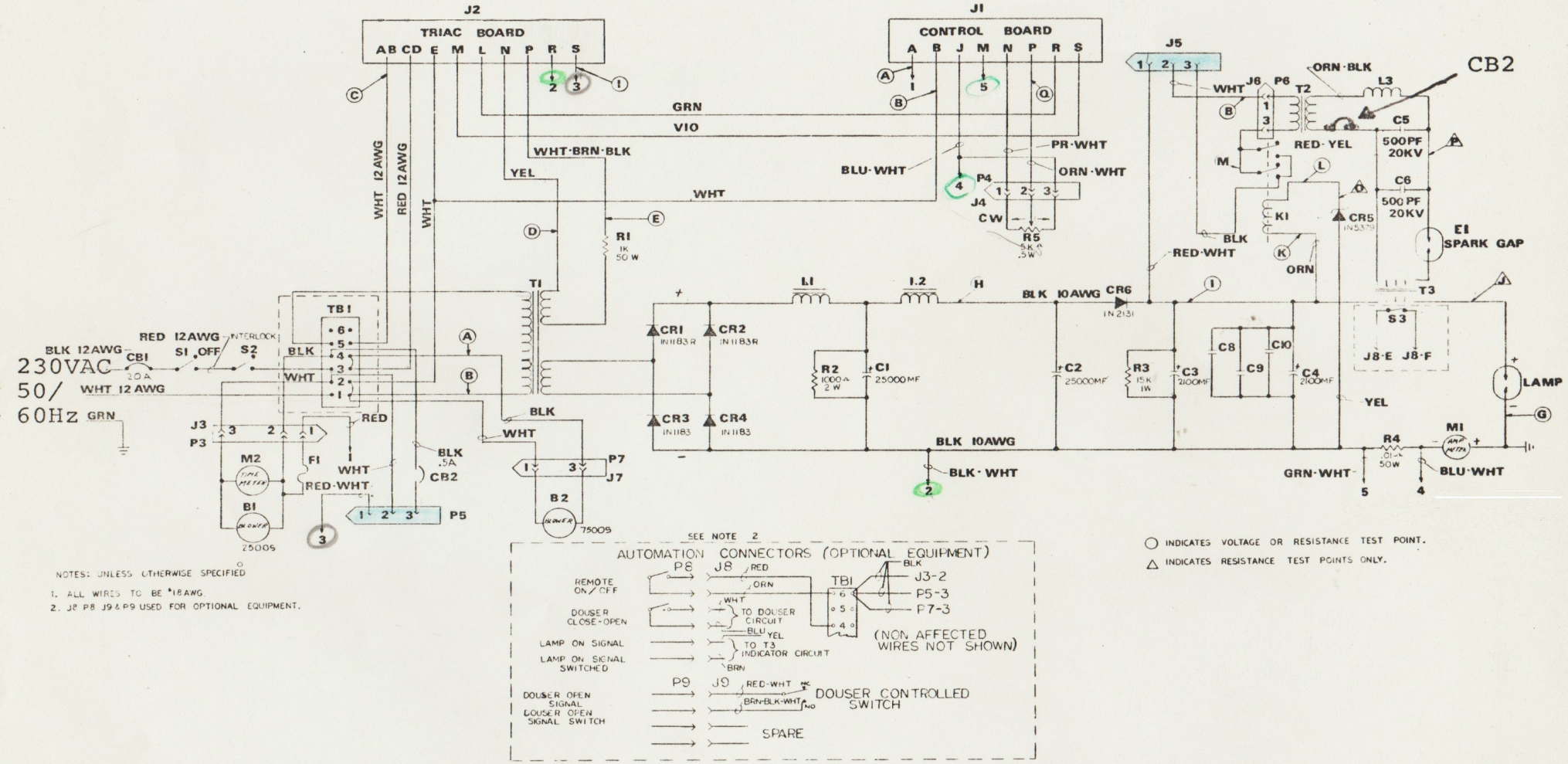

Figure 5-1. Wiring Diagram, Model 1000 Lamphouse

Table 5-1. Trouble Shooting Chart

Symptom	Probable Cause	Remedy
1. Lamp does not operate when switched on; fans do not operate.	1.1 15 amp circuit breaker (on/off switch) or main panel circuit breaker tripped.	1.1 Reset circuit breaker(s).
	1.2 Automation control circuit disconnected or inoperative (This applies only to power supplies provided with automation control).	1.2 Check automation connector and associated wiring.
2. Bulb flashes but does not remain on.	2.1 Defective control board.	2.1 Replace control board. See circuit board replacement information.
	2.2 Loose connection in DC current circuit (CR1-CR4, L1, L2, C1, C2, C3, CR6).	2.2 Visually inspect all the heavy (DC) wiring for loose connections, especially at the ammeter and capacitor terminal. Retighten as required.
	2.3 Oxidized circuit board connection.	2.3 Remove and insert the circuit boards into their respective connectors.
	2.4 Defective bulb.	2.4 Replace bulb.
	2.5 Defective current control potentiometer.	2.5 Measure resistance. See table 5-3.
3. Bulb does not flash.	3.1 1/4 amp fuse blown.	3.1 Check and replace if blown.
	3.2 1/2 amp circuit breaker tripped.	3.2 Reset circuit breaker.

Table 5-1. Trouble Shooting Chart (continued)

Symptom	Probable Cause	Remedy
3. Bulb does not flash (cont.).	3.3 Ignitor relay failure.	3.3 Try to manually start the lamp with a momentary jumper across the contacts of K1. If it starts, the K1 relay is defective.
	3.4 Shorted blocking diode (CR6).	3.4 Check voltage on both sides. See figure 5-1 and table 5-2.
	3.5 Check steps 2.1, 2.2, or 2.4.	3.5 See 3.1, 3.2, or 3.4.
	3.6 Ignitor component failures.	3.6 Check resistance valves of ignitor circuit compenents T2, T3, C5, C6, etc. See table 5-3.
4. Lamp runs at excessive current; no current control. Current remains on, even when the 1/4 amp fuse on rear bulkhead is removed.	4.1 Defective triac board.	4.1 Replace triac board.
5. Lamp runs at excessive current; no current control. Current goes to 0 when 1/4 amp fuse is removed.	5.1 Defective control board.	5.1 Replace control board.
	5.2 Defective current control potentiometer.	5.2 Check resistance as per table 5-3.

Table 5-1. Trouble Shooting Chart (continued)

Symptom	Probable Cause	Remedy
6. Lamp current fluctuates slowly by several amperes. Unit makes a grunting sound and trips the circuit breaker when 1/4 amp fuse is removed.	6.1 Defective triac board.	6.1 Replace triac board.
7. Unit makes loud buzzing sound. Lamp may or may not light; circuit breaker trips.	7.1 Defective triac board.	7.1 If removal of 1/4 amp fuse does not eliminate noise, trouble is defective triac boar Replace triac board.
	7.2 Defective control board.	7.2 If removal of 1/4 amp fuse eliminates noise, trouble is defective control board. Replace control board.
8. Apparent normal operation except for a rapid (60 Hz) flicker, and circuit breaker trips when lamp current is above 25 amps. This may also occur only after the unit warms up.	8.1 Loose or intermittent connector on one of the four diodes (CR1-CR4) mounted on transformer assembly.	8.1 Check connections.
	8.2 Defective diode (CR1-CR4).	8.2 Replace defective diodes.

Table 5-1. Trouble Shooting Chart (continued)

Symptom	Probable Cause	Remedy
9. Normal operation except for a low frequency (approximately 10 per second) flicker which may occur only at certain current settings.	9.1 Defective control board.	9.1 Check the three electrolytic capacitors on the control board or replace board if defective.
	9.2 Defective triac board.	9.2 Replace triac board.
10. Unit operates normally except for loud hum or buzz. Sound may change in intensity as unit heats up.	10.1 Defective transformer or filter choke.	10.1 Replace transformer or filter choke.
11. Not possible to obtain maximum lamp current (36A for 1000 lamp or 40A for 1600 lamp).	11.1 Low line voltage.	11.1 Minimum AC line voltage for proper operation @ 44 with a 21 volt lamp is approximately 180 V.
	11.2 High voltage lamp.	11.2 Normal maximum lamp voltage is approximately 21 volts. Replace if higher.
	11.3 Open rectifier diode.	11.3 See symptom No. 5.
	11.4 Control board potentiometer misadjusted.	11.4 Readjust potentiometer.

Table 5-1. Trouble Shooting Chart (continued)

Symptom	Probable Cause	Remedy
12. Bulb ignites almost instantly: i.e., does not wait the normal five seconds, and the 1/4A circuit breaker pops out after several seconds.	12.1 Zener diode CR5 (on relay) shorted, or defective relay.	12.1 Note that extended operation under these conditions may cause the high voltage transformer in the front of the unit to burn itself out. Replace diode CR5 and high voltage transformer if burned out.
13. Unit operates normally for a time, then the bulb goes out. Circuit breaker trips. Unit returns to normal after cooling down.	13.1 Thermal overload switch on triac board tripped due to air passage blockage.	13.1 Check for dirt accumulation in the air path and particularly in the air duct under the triac board.
	13.2 Defective thermal overload switch.	13.2 Replace switch or complete triac board.
14. Bulb flickers and/or goes out especially at low lamp currents. Bulb re-ignites and repeats the above.	14.1 Unstable bulb.	14.1 Replace bulb.

Table 5-2. Test Voltages

VOLTAGE TEST POINTS	VOLTAGE READING BEFORE LAMP IGNITION	VOLTAGE READING AFTER LAMP IGNITION	NOTES
A to B	230 VAC	230 VAC	Line voltage.
B to C	230 VAC	135V to approximately 230 VAC	Depends on lamp current and type of voltmeter.
D to E	0 to 5 seconds; Approximately 150 VAC	≃ 20 VAC	Voltage changes 0 to 140 V in about 5 seconds after power is first applied.
I (±) to G (-)	0 to 5 seconds; Approximately 150 VDC	20 V ± 1 VDC	Lamp voltage.
H+ to G (-)	40 V	21 V ± 1 VDC	
J+	DO NOT MEASURE; THE IGNITION VOLTAGE WILL DESTROY ALMOST ANY VOLTMETER		
L (-) to F+	≃ 10 to 30 VDC (for less than 1 second)	0 VDC	Ignitor relay coil.
B to M	115 VAC for about 5 seconds.	0 V	High voltage transformer primary.
N (+) to G (-)	8 to 12 VDC	8 to 12 VDC	

Note: Refer to Schematic Diagram, Figure 5-1, for test points.

Table 5-3. Resistance Test Points

RESISTANCE TEST POINT	RESISTANCE	NOTES
A to C	.1Ω	T1 Primary
D to E	1K	R1 and T1 Secondary
H to G	900Ω	Use X1 ohmmeter range, polarity sensitive.
M to B	25Ω	T2 Primary
O to P	25K	T2 Secondary (Transformer frame is point 0)
I to J	Less tha .05 Ω	T3 Secondary
K to L	5K	Reading is polarity sensitive
N to G	5 K with control board.	Current adjust potentiometer resistance
G to Q	0 to 5K with control board removed.	Depends on current adjust setting
H to I	20Ω/2K (appropriate values)	Blocking diode forward and reverse resistance ("in circuit" reading)

NOTE: Take all resistance measurements with power off.
See schematic diagram, figure 5-1, for test points.

5-7 REMOVAL AND REPLACEMENT OF TRIAC OR CONTROL BOARD.

The following procedure should be followed in the event that the Control Board or Triac Board is replaced. Refer to Drawing No. 1140859 for locations. Figure 5-2 shows the detailed installation.

Removal of Control Board

a. Remove the Control Board (Part No. 1130845) by removing the two 4-40 screws securing the end of the board opposite the connector to the channel bracket. Do not lose the fiber washers as these are used to space the circuit board away from the channel bracket. Without these washers the circuit wiring may short to ground.

b. Pull the control board straight out from its connector.

Removal of Triac Board

a. Looking down on the channel bracket, loosen screw no. 1 approximately three turns.

b. Completely loosen screw no. 2 which holds the heat sink to the channel bracket. An access hole is provided in the upper lip of the bracket for access to this screw. It is recommended that this screw with its nylon grommet and metal flatwasher be left in place rather than trying to remove completely.

c. Lift up on the channel bracket, pulling it away from the heat sink.

d. Pull the triac board straight out from its connector. Do not disassemble triac board from the heat sinks.

Replacing Triac Board

a. Before replacing the triac board, insert the nylon grommet (from screw no. 2) in the U-shaped mounting hole on the heat sinks. Note: New triac boards are shipped with heat sinks already installed on board. The thick side of the grommet should be on the bottom. Next, place the screw and flat washer in this nylon grommet.

b. Carefully reinstall the triac board with its attached heat sinks into its connector. While lifting up on the heat sinks to hold it away from the bracket, pivot the bracket back to its original position, being careful to properly reinsert the fixed nylon grommet into the second heat sink slot.

c. Tighten screws no. 1 and no. 2.

NOTE

When reinstalling the triac board, be sure that the clearance between the upper bulb adjustment control rod and the circuit side of the triac board immediately above this rod is not less than 1/8 inch. Replacement triac boards are supplied with insulating paper covering this area of the circuitry.

Reinstalling Control Board

Reinstallation of the control board is essentially the reverse of disassembly. Be sure to place the insulating fiber washers between the control board and the channel bracket.

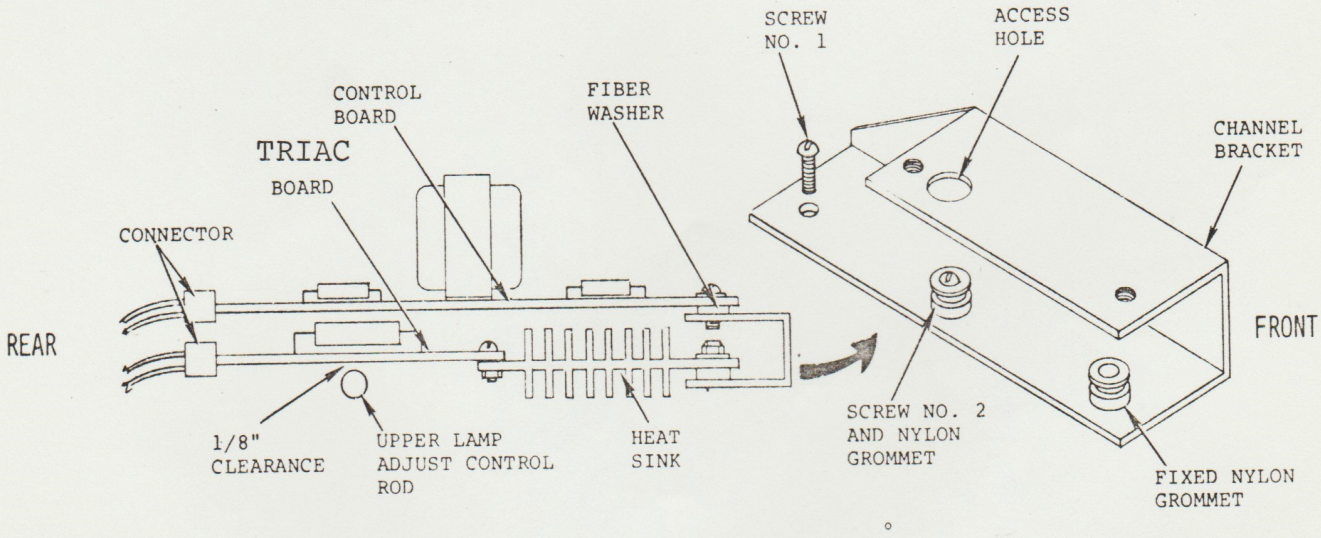

Figure 5-2, Side View of Circuit Board Installation

SECTION 6 - BULB WARRANTY

The lamp warranty on the xenon bulb will not be honored unless the necessary forms are completed.

Upon installation of a new bulb, the xenon lamp warranty card must be filled out and returned to Optical Radiation Corporation. It is mandatory that all information on the card be completed. Shown below is a sample card which was included with delivery.

This card must be filled out and returned within 30 days after installation of the lamp to validate the warranty of your new xenon lamp.

XENON LAMP WARRANTY CARD

USER'S NAME _____ DATE _____

COMPANY _____

STREET ADDRESS _____

CITY _____ STATE _____ ZIP _____

BULB MODEL NO. _____ BULB SERIAL NO. _____

INSTALLED IN _____ LAMPHOUSE MODEL NO. _____

LAMPHOUSE SERIAL NO. _____

RUNNING TIME METER READING AT TIME OF INSTALLATION _____ HRS.

PURCHASED FROM _____

CITY _____

READ ALL INSTRUCTIONS BEFORE INSTALLING LAMP

If the bulb has failed during the warranty period, the xenon lamp warranty claim form must be filled out and returned to Optical Radiation Corporation along with the defective bulb.

SECTION 7 - SPARE PARTS LIST

The following is the list of parts which comprise the Model 1000 Lamphouse/Power Supply. When ordering replacement parts, please specify complete part number and quantity required. Consult your local dealer or write Optical Radiation Corporation for prices.

REVISIONS				
ZONE	LTR	DESCRIPTION	DATE	APPROVED
		SEE SHEET 2		

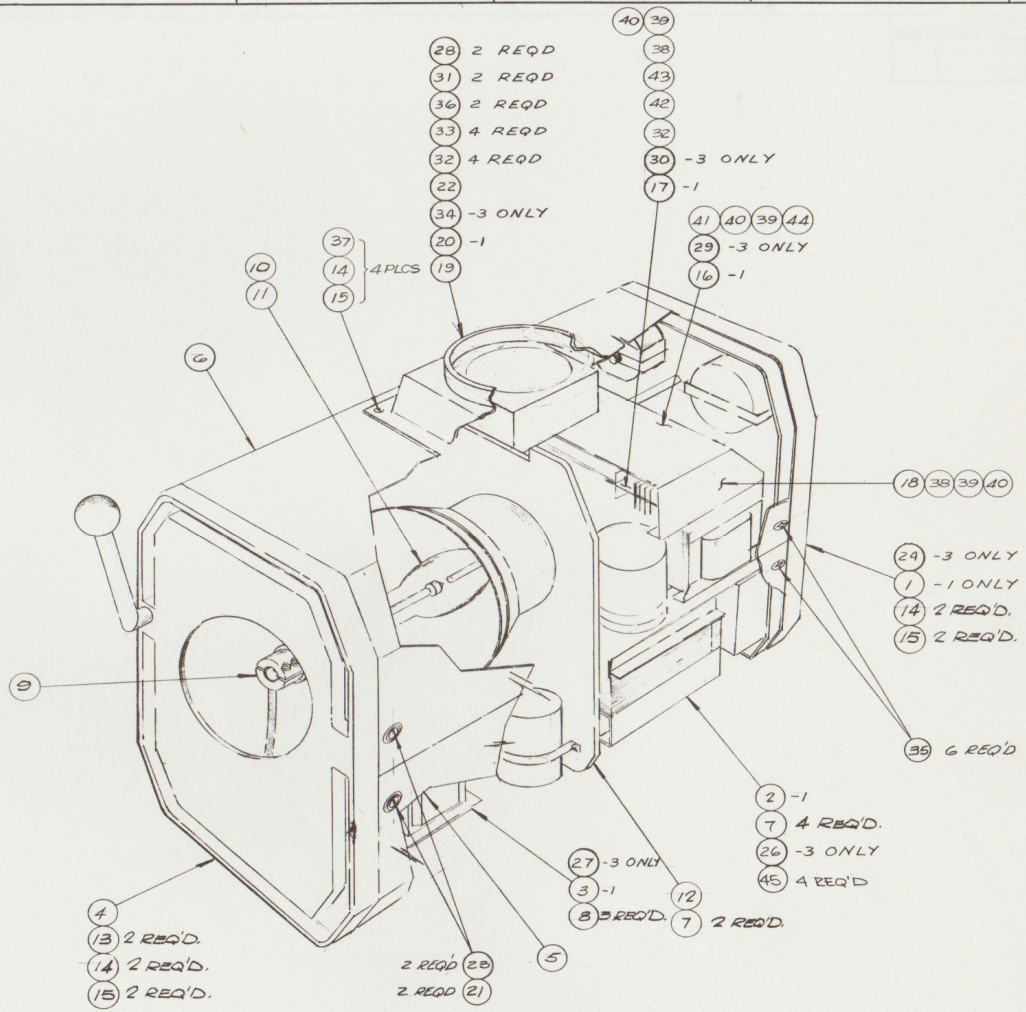

QTY REQD -3	QTY REQD -1	SYM.	NOMENCLATURE OR DESCRIPTION	REF DES	CODE IDENT	PART OR IDENTIFYING NO.	SPECIFICATION	MATERIAL OR NOTE	ZONE	ITEM NO.
4	4		SCREW, OVAL HD.				10-32 x 1/2			37
2	2		SCREW, PAN HD				6-32 x 5/8			36
6	6		SCREW TRUSS HD				10-32 x 3/8			35
1	/		FAN			7550	PAMOTOR			34
4	4		SCREW, PAN HD				10-32 x 1/2			33
5	5		SCREW, PAN HD				6-32 x 1/2			32
2	2		NUT, HEX				6-32			31
1	/		TRIAC BOARD	ASSY		1140903-3				30
1	/		CONTROL B.D.	ASSY		1140950-3				29
2	2		WASHER, LOCK				#6			28
1	/		IGNITER ASSY			1140887-3				27
1	/		POWER SUPPLY	ASSY		1140879-3				26
/										25
1	/		REAR BULKHEAD	ASSY		1140880-3				24
2	2		SCREW			NAS603-9				23
1	/		SCREEN			1120971				22
2	2		WASHER FINISHING				#10 N.F. BRASS			21
/	1		FAN			7500S	PAMOTOR			20
1	/		EXHAUST HOUSING			1141951				19
1	1		CHANNEL BRACKET			1120840				18
/	1		SCR. PC. BD. ASSY			1142518				17
/	1		CONTROL BD ASSY			1140950-1				16
8	8		NUT, HEX				10-32			15
8	8		WASHER, STAR				#10			14
2	2		FLT. OVAL HD. SCREW				10-32 x 1/4			13
1	1		CENTER BULKHEAD			1140881				12
1	1		700 W XENON			1130629				11
1	1		1 KW XENON			1100266				10
1	1		FRONT LAMP FIT.			1120638				9
3	3		SELF TAPPING SCR.				6-32 x 3/8			8
2	2		FLAT HEAD SCREW				10-32 x 1/2			7
1	1		UPPER WRAP			1142025				6
1	1		LOWER WRAP			1140901				5
1	1		FRONT BULKHEAD	ASSY		1140894				4
/	1		IGNITER ASSY			1140887-1				3
/	1		POWER SUPPLY	ASSY		1140879-1				2
/	1		REAR BULKHEAD	ASSY		1140880-1				1

LIST OF MATERIAL

NOTES:
1. FOR SCHEMATIC SEE DWG 1140957.

DASH NO.	NEXT ASSY	USED ON
-3	FINAL	PD-506-1000B
-1	FINAL	PD506-10

APPLICATION

UNLESS OTHERWISE SPECIFIED DIMENSIONS ARE IN INCHES
TOLERANCES
DECIMALS .XX = ± .03 .XXX = ± .010
ANGLES ± 1/2°
MACHINE FINISH ✓
DO NOT SCALE DRAWING

MATERIAL:
FINISH:

DRAWN	DC	3/2/71
CHECK	B Nicely	3/8/71
DESIGN		
ENGR		3/8/71
APPR		
APPR		
CONTRACT NO. PD506-10		
APPROVED		
APPROVED		

OPTICAL RADIATION CORPORATION
2626 S. PECK RD., MONROVIA, CALIF. 91016 (213) 446-6139

MODEL 1000 & 1000B
TOP ASSEMBLY

SIZE	CODE IDENT NO.		REV
D	33030	1140859	D
SCALE —	WEIGHT	SHEET 1 OF 2	

D 1140859 D

REVISIONS

ZONE	LTR	DESCRIPTION	DATE	APPROVED
	A	1) ADDED -3 & -5 QUANTITIES TO L/N. 2) P/N OF ITEM 6 WAS 1140700. (3) P/N OF ITEM 16 WAS 1130845. (4) P/N OF ITEM 17 WAS 1130849. (5) P/N OF ITEM 18 WAS 1110840. (6) P/N OF ITEM 19 WAS 1140956. (7) P/N OF ITEM 20 WAS 2500S. (8) DELETED ITEM 21. (9) QUANTIES OF ITEMS 14 & 15 WERE 4. (10) QTY OF ITEM 23 WAS 12. 11) ADDED SKT 2. (12) ADDED ITEMS 24 THRU 44. (13) TITLE WAS "CINE-X 1000 TOP ASSEMBLY." REF. E.O. 40042	4/8/72	B.D
	B	ADDED: ITEM 21 ITEM 35 EO 60201 ADDED: NOTE 1	4/14/72	B.D.
	C	ADDED ITEM 46 E.O. 00325	9/18/72	
	D	ITEM 17 WAS: 1140903-1 TRIAC BD. ASSY	11/3/72	

QTY REQD -3	QTY REQD -1	SYM.	NOMENCLATURE OR DESCRIPTION	REF DES	CODE IDENT	PART OR IDENTIFYING NO.	SPECIFICATION	MATERIAL OR NOTE	ZONE	ITEM NO.
										48
										47
										46
4	4		SCREW SELF LOCK			LP54J02PBHQ	10-32 × 1/2	LONG-LOK		45
2	2		WASHER, FIBER			2150	#6 × .375 DIA	H.H SMITH		44
1	1		NUT, HEX, SELF LOCKING				6-32			43
1	1		WASHER, FLAT				#6			42
2	2		SCREW, PAN HEAD				4-40 × 3/8			41
4	4		WASHER, LOCK				#4			40
4	4		WASHER, FLAT				#4			39
2	2		SCREW, PAN HEAD				4-40 × 1/2			38

LIST OF MATERIAL

DASH NO.	NEXT ASSY	USED ON

APPLICATION

UNLESS OTHERWISE SPECIFIED DIMENSIONS ARE IN INCHES
TOLERANCES
DECIMALS .XX = ± .03 .XXX = ± .010 ANGLES ± 1/2°
MACHINE FINISH ✓
DO NOT SCALE DRAWING

MATERIAL:

FINISH:

DRAWN	
CHECK	
DESIGN	
ENGR	
APPR	
APPR	
CONTRACT NO. PD 506-10	
APPROVED	

OPTICAL RADIATION CORPORATION
3888 S. PECK RD., MONROVIA, CALIF. 91016 (213) 446-4133

MODEL 1000 & 1000B
TOP ASSEMBLY

SIZE	CODE IDENT NO.		REV
D	33030	1140859	D
SCALE	WEIGHT	SHEET 2 OF 2	

D 1140859 D

REVISIONS

ZONE	LTR	DESCRIPTION	DATE	APPROVED
	A	ITEM #17 WAS LOCKING PIN ITEM #3 WAS 1100276	6-9-71	CWK
	B	ADD: ITEM 19 NOTES 1 & 2. ITEM 16 WAS NUT, HEX REF. EO #00129	5-16-72	
	C	REF. EO-00274	7-1972	(B.J.)

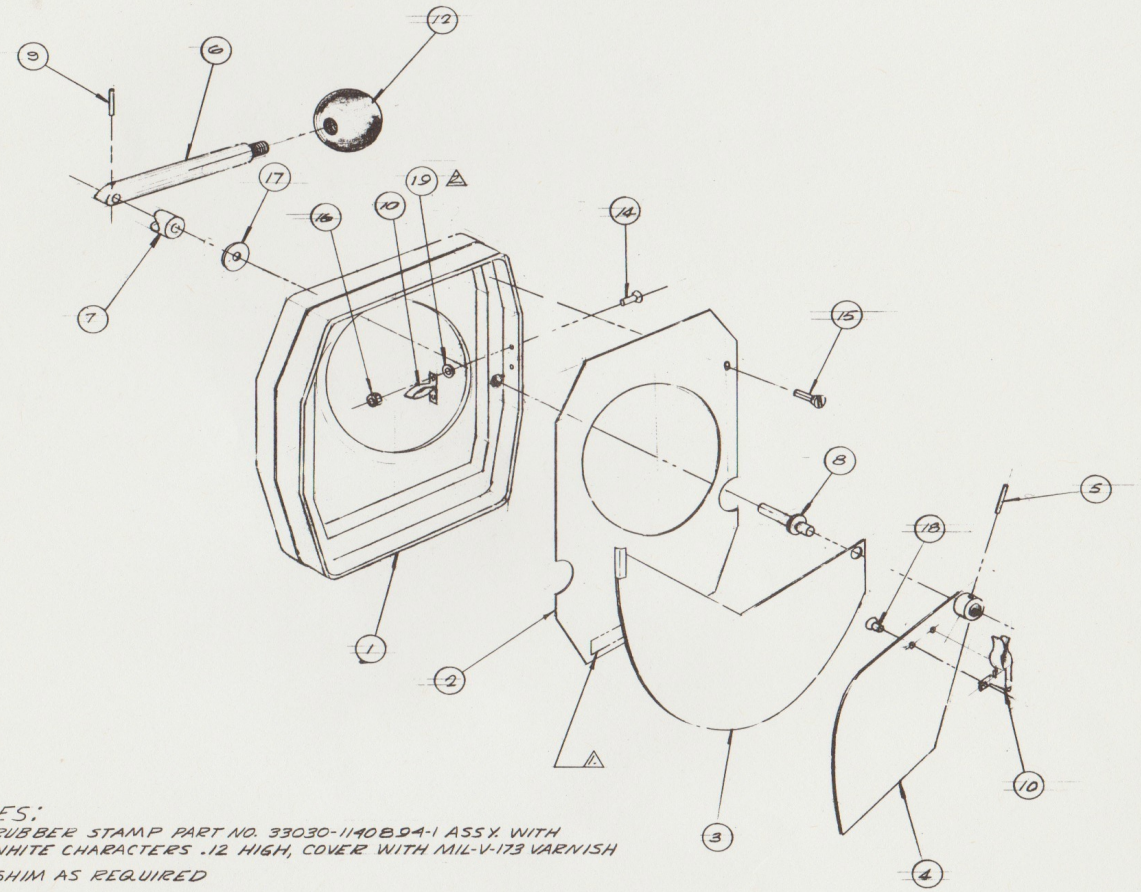

NOTES:

1. RUBBER STAMP PART NO. 33030-1140894-1 ASSY. WITH WHITE CHARACTERS .12 HIGH, COVER WITH MIL-V-173 VARNISH
2. SHIM AS REQUIRED

QTY REQD -3	-2	-1	SYM.	NOMENCLATURE OR DESCRIPTION	REF DES	CODE IDENT	PART OR IDENTIFYING NO.	SPECIFICATION	MATERIAL OR NOTE	ZONE	ITEM NO.
											20
		4/12		WASHER, FLAT			#6				19
		2		FLAT HD RIVET			.125 DIA X 1/4 LG				18
		1		FLAT WASHER			3/8 ID X 7/8 OD X .03	THK			17
		2		NUT, SELFLOCKING			6-32				16
		4		FLAT HEAD SCREW (UNDERCUT)			8-32 X 1/4 LG				15
		2		FLAT HD SCREW			6-32 X 5/8 LG				14
											13
		1		KNOB			A0845100	AMER. TOOL			12
											11
		1		CATCH			61181	SEARS			10
		1		GROOVE PIN			GP1-0800X.625-14	GROOV-PIN			9
		1		SHAFT			1100315				8
		1		SPACER			1100274				7
		1		HANDLE			1100273				6
		1		GROOVE-PIN			GP1-0800X0750-14	GROOV-PIN			5
		1		SHUTTER PLATE			1140668				4
		1		SHUTTER PLATE			1140980				3
		1		SHUTTER RET PLATE			1100281				2
		1		FRONT BULKHEAD			1100254				1

LIST OF MATERIAL

QTY	DASH NO.	NEXT ASSY	USED ON
1	-	1100174	PD506
1	-1	1151662-1	PD506-30
1	-1	1140859-3	PD506-1008
1	-1	1140859-1	PD506-10

APPLICATION

UNLESS OTHERWISE SPECIFIED DIMENSIONS ARE IN INCHES
TOLERANCES
DECIMALS .XX = ± .03 .XXX = ± .010
ANGLES ± 1/2°
MACHINE FINISH ✓
DO NOT SCALE DRAWING

MATERIAL:

FINISH:

DRAWN	D.C.	3/8/71
CHECK	B. Nicely	3/8/71
DESIGN		
ENGR		3/8/71
APPR		
APPR		
CONTRACT NO.	PD506-10	
APPROVED		
APPROVED		

OPTICAL RADIATION CORPORATION
8820 S. PECK RD., MONROVIA, CALIF. 91016 (213) 446-6133

FRONT BULKHEAD ASSEMBLY

SIZE	CODE IDENT NO.		REV
D	33030	1140894	C

SCALE — WEIGHT — SHEET 1 OF 1

1140894 C

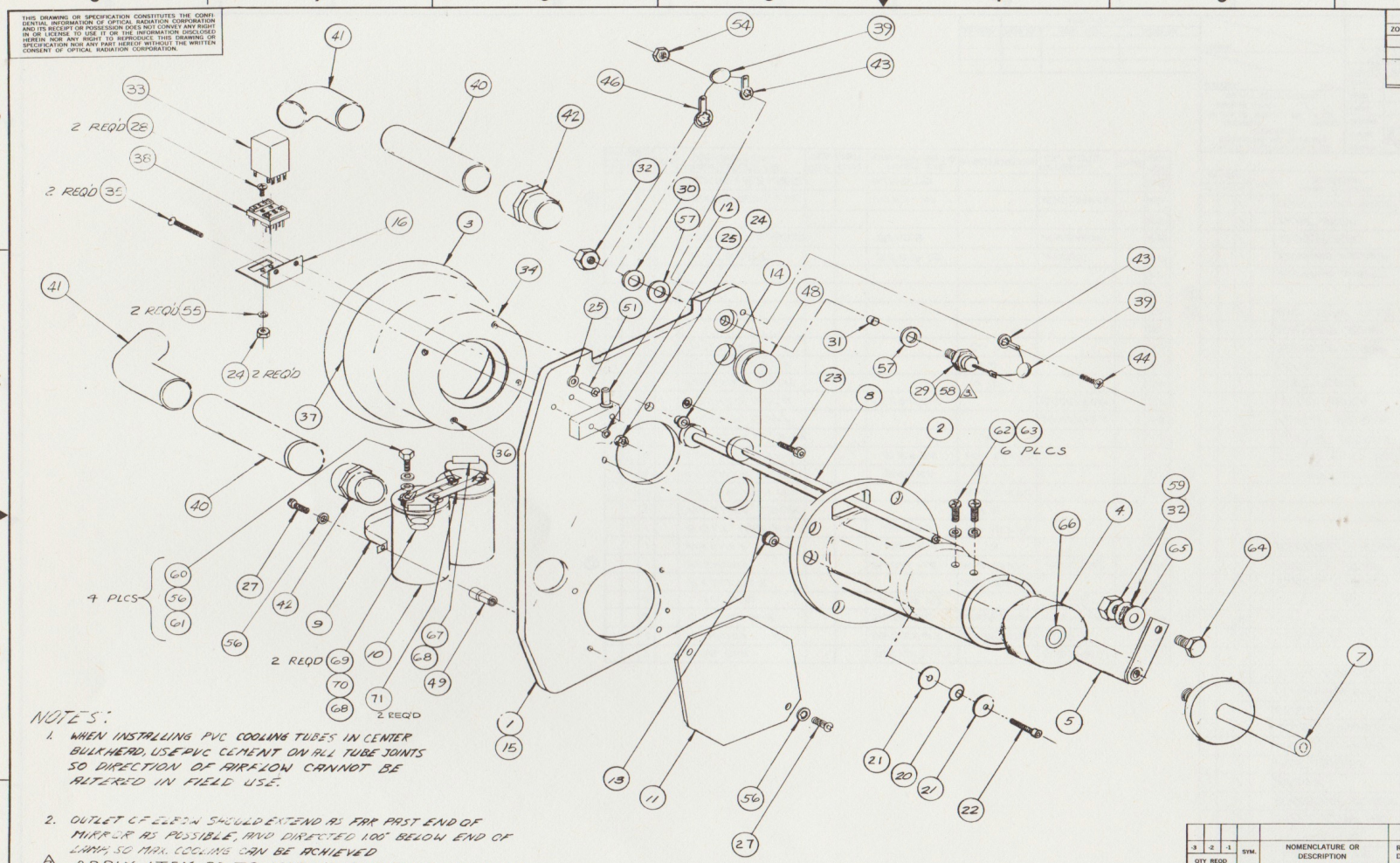

NOTES:

1. WHEN INSTALLING PVC COOLING TUBES IN CENTER BULKHEAD, USE PVC CEMENT ON ALL TUBE JOINTS SO DIRECTION OF AIRFLOW CANNOT BE ALTERED IN FIELD USE.

2. OUTLET OF ELBOW SHOULD EXTEND AS FAR PAST END OF MIRROR AS POSSIBLE, AND DIRECTED 1.06" BELOW END OF LAMP, SO MAX. COOLING CAN BE ACHIEVED

3. APPLY ITEM 58 TO MATING SURFACE OF ITEM 29 BEFORE INSTALLING INTO BULKHEAD.

REVISIONS

ZONE	LTR	DESCRIPTION	DATE	APPROVED
	K	CHANGE ITEM 46, 24, & 25 REF. EO #00646, HISTORY #00654	9/19/73	
	J	CHANGE ITEM 6, 7, 17, 18 & 19, ADD ITEM 66 REF. EO #00656	8/21/73	

-3	-2	-1	SYM.	NOMENCLATURE OR DESCRIPTION	REF DES	CODE IDENT	PART OR IDENTIFYING NO.	SPECIFICATION	MATERIAL OR NOTE	ZONE	ITEM NO.
QTY REQD											

LIST OF MATERIAL

UNLESS OTHERWISE SPECIFIED DIMENSIONS ARE IN INCHES
TOLERANCES
DECIMALS .XX = ± .03 .XXX = ± .010
ANGLES ± 1/2°
MACHINE FINISH ✓
DO NOT SCALE DRAWING

MATERIAL:

FINISH:

DRAWN R.C. 3/8/71
CHECK R. Nigely 3/8/71
DESIGN
ENGR 3/8/71
APPR
APPR
CONTRACT NO. PD 504-10
APPROVED
APPROVED

OPTICAL RADIATION CORPORATION
2826 S. PECK RD., MONROVIA, CALIF. 91016 (213) 446-6133

CENTER BULKHEAD ASSY.

SIZE	CODE IDENT NO.		REV
D	33030	1140881	K

SCALE 1:2 WEIGHT SHEET 1 OF 2

QTY REQD	DASH NO.	NEXT ASSY	USED ON
1	-1	1140859-3	MODEL-1000B
1	-1	1140852-1	MODEL-1000

APPLICATION

D 1140881 K

SYM	-3	-2	-1	NOMENCLATURE OR DESCRIPTION	REF DES	CODE IDENT	PART OR IDENTIFYING NO.	SPECIFICATION	MATERIAL OR NOTE	ZONE	ITEM NO.
			2	BUSS BAR			5002-2-17		SEASTROM		71
			1	CAPACITOR			WM52547	.047MF, 220VDC	C.D.E.		70
			2	CAPACITOR			30GAD50	.005MF, 3000V	SPRAGUE		69
			4	LUG, #10			RA-873		THOMAS & BETTS		68
			1	RESISTOR				15K, ±2W 5%			67
(J)			1	BUSHING			B1016-12	NON-OILED	BOSTON		66
			1	WASHER, FLAT			BRASS	1/4			65
			1	BOLT, HEX HD			BRASS	1/4-20 x 1/2			64
			6	WASHER, LOCK				#8			63
			6	SCREW, PAN HD				8-32 x 1/2			62
			4	WASHER, FLAT			BRASS	#10			61
			4	SCR, HEX HEAD			BRASS	10-32 x 3/8			60
			1	INT. TOOTH LOC. WASH.				1/4			59
			A/R	THERMAL COMP					WAKEFIELD		58
			2	WASHER, MICA			5G24-15-2		SEASTROM		57
			7	WASHER, LOCK				#10			56
(H)			4	WASHER, LOCK				#4			55
(H)			1	NUT, HEX				6-32			54
(H)											53
(H)											52
(H)											51
(H)											50
			2	NUTSERT			9507-10		AVDEL		49
			1	GROMMET, RUBBER			91109		H.H. SMITH		48
											47
(H)			1	LOCKING TERM. LUG			1410-14		H.H. SMITH		46
			1	DIODE, ZENER			IN5379				45

QTY REQD

SYM	-3	-2	-1	NOMENCLATURE OR DESCRIPTION	REF DES	CODE IDENT	PART OR IDENTIFYING NO.	SPECIFICATION	MATERIAL OR NOTE	ZONE	ITEM NO.
(H)			1	SCREW, PAN HD				6-32 x 1/2			44
(H)			2	LOCKING TERM. LUG			1114-6		H.H. SMITH		43
			2	ADAPTER PVC			1"MPT-1" PIPE				42
			2	ELBOW, PVC			1" ELBOW				41
			A/R	PVC PIPE			1123286				40
(I)			2	CAPACITOR, DISC.			SGA-350	.05uf 500V CERAMIC	SPRAGUE		39
(H)			1	RELAY SOCKET			A10-1		POTTER & BRUMFIELD		38
			A/R	ADHESIVE			RTV-60		GE		37
			4	RIVNUTS			#AB-120		GOODYEAR		36
			2	SCREW, FLAT HD.				#4-40x1/4			35
			1	REFLECTOR HOLDER			1100269				34
			1	RELAY			R10-E3-X2 J5.0K		POTTER & BRUMFIELD		33
			1	NUT, BRASS				1/4-20			32
			1	NYLON BUSHING			1121309-1				31
			1	INSULATOR, WASHER			4527A		THERMALLOY CO.		30
			1	DIODE			1N2131A OR 1N2132A		I.R.		29
(H)			2	SCREW PAN HD.				4-40 x 5/16			28
			4	SCREW, PAN HD.				#10-32x 1/2LG			27
(H)											26
			2	WASHER, FIBER				#4			25
(H)			4	NUT, HEX-ESNA				#4-40			24
			4	SCR, SOC. HD CAP				#10-32 x .75LG			23
			2	SCREW, CAP HD				#8-32 x .40LG			22
			4	WASHER FLAT			1/4 OD x .19ID				21
			2	BELLVILLE, WASHER			5808-36-25		SEASTROM		20
(J)											19
(J)											18
(J)											17
(H)			1	MTG. BRKT, RELAY SOCKET			1122822				16
			1	CENTER BLKHD (CAST)			1100476				15
			2	FLANGE BUSHING			FB-68-3		BOSTON		14
			2	FLANGE BUSHING			FB-1012-4		BOSTON		13
			1	MICRO SWITCH			BA2RQ1		MICRO SWITCH		12
			1	COVER PLATE			1121735				11
			2	CAPACITOR			36D212F150BC2A		SPRAGUE		10
			1	CAPACITOR CLAMP			1120853-1				9
			2	CAM SHAFT ASSY.			1120622-1				8
(J)			1	END PLATE ASSY.			1131656-1				7
(J)											6
			1	BEARING SHAFT			1100161				5
			1	BEARING HOLDER			1100164-1				4
			1	REFLECTOR			1100290				3
			1	TUBE ASSY.			1100165-1				2
			1	CENTER BLKHD (MACH)			1140849-1				1

QTY REQD

LIST OF MATERIAL

REVISIONS

ZONE	LTR	DESCRIPTION	DATE	APPROVED

UNLESS OTHERWISE SPECIFIED DIMENSIONS ARE IN INCHES
TOLERANCES
DECIMALS .XX = ± .03 .XXX = ± .010
ANGLES ± 1/2°
MACHINE FINISH √
DO NOT SCALE DRAWING

MATERIAL:

FINISH:

DRAWN	D.C.	
CHECK	B.N. Isely	3/8/71
DESIGN		
ENGR		
APPR		
APPR		

CONTRACT NO. RD506-10

APPROVED

APPROVED

OPTICAL RADIATION CORPORATION
3828 S. PECK RD., MONROVIA, CALIF. 91016 (213) 446-6139

CENTER BULKHEAD ASSY.

SIZE	CODE IDENT NO.		REV
D	33030	1140881	K

SCALE — WEIGHT — SHEET 2 OF 2

QTY REQD	DASH NO.	NEXT ASSY	USED ON

APPLICATION

D 1140881

REVISIONS				
ZONE	LTR	DESCRIPTION	DATE	APPROVED
	J	CHANGE ITEM 24 WAS 200-70N LT ITEM 19 WAS 4X845, ITEM 13 WAS 5007, REF ED #00653, HISTORY ED #00659.	4/12/73	

NOTES:

1. MOUNTING HARDWARE SUPPLIED WITH COMPONENTS
2. RUBBER STAMP P/N 33030-114088-1, -3, OR -5 WITH BLACK CHARACTERS .12 HIGH, COVER WITH MIL-V-173 VARNISH
3. ATTATCH ITEMS 5 & 21 AFTER ASSEMBLY OF ITEMS 1 & 2
4. PLACE APPROXIMATLY AS SHOWN.

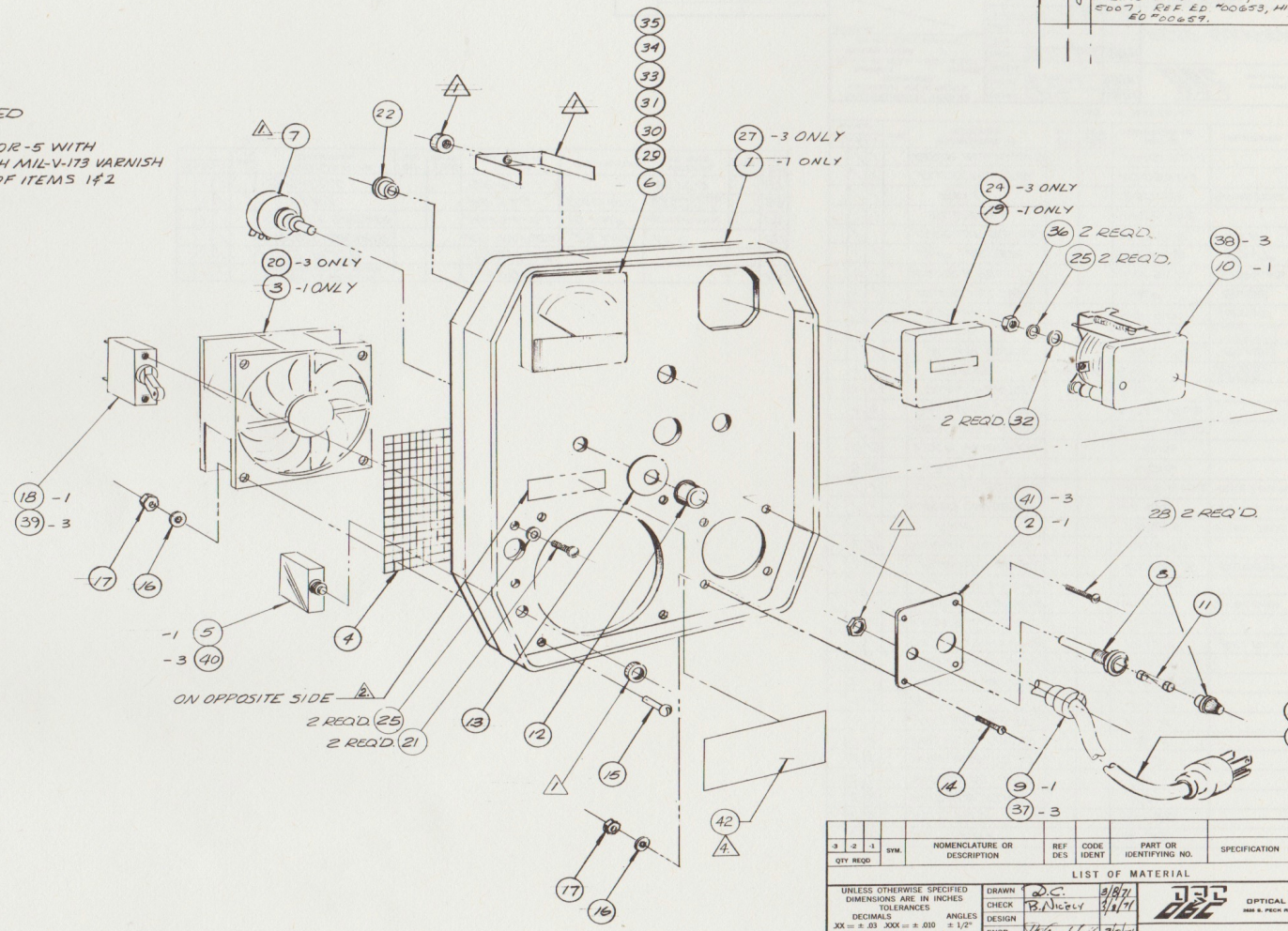

QTY REQD -3	-2	-1	SYM.	NOMENCLATURE OR DESCRIPTION	REF DES	CODE IDENT	PART OR IDENTIFYING NO.	SPECIFICATION	MATERIAL OR NOTE	ZONE	ITEM NO.

LIST OF MATERIAL

QTY	DASH NO.	NEXT ASSY	USED ON
1	-3	1140859-3	PD-506-1000B
1	-1	1140859-1	PD 506-10

APPLICATION

UNLESS OTHERWISE SPECIFIED DIMENSIONS ARE IN INCHES
TOLERANCES
DECIMALS .XX = ± .03 .XXX = ± .010
ANGLES ± 1/2°
MACHINE FINISH √
DO NOT SCALE DRAWING

MATERIAL:

FINISH:

DRAWN	D.C.	3/8/71
CHECK	P. Nigely	3/8/71
DESIGN		
ENGR		3/8/71
APPR		
APPR		
CONTRACT NO.	PD506-10	
APPROVED		
APPROVED		

OPTICAL RADIATION CORPORATION
3566 E. PECK RD., MONROVIA, CALIF. 91016 (213) 446-6133

REAR BULKHEAD ASSY

SIZE	CODE IDENT NO.		REV
D	33030	1140880	J

SCALE — WEIGHT — SHEET 1 OF 2

D 1140880 J

REVISIONS

ZONE	LTR	DESCRIPTION	DATE	APPROVED

-5	-3	-1	SYM	NOMENCLATURE OR DESCRIPTION	REF DES	CODE IDENT	PART OR IDENTIFYING NO	SPECIFICATION	MATERIAL OR NOTE	ZONE	ITEM NO
	1	1		ORCON LAMPHOUSE IDENTIFICATION PLATE			1132919				42
	1	/		FUSE PLATE			1130846-3				41
	1	/		CIRCUIT BREAKER			45-700,P,25A	.25 AMP	ETA		40
	1	/		CIRCUIT BREAKER			JA1-A3-A-15-2	15 AMP	HEINEMANN		39
	1	/		RELAY			PR3AG	240 VAC	POTTER & BRAMFIELD		38
	1	/		BUSHING			SR-8P-1		HEYCO		37
	2	2		NUT, HEX			6-32				36
	2	2		NUT, HEX			1/4-20				35
	2	2		WASHER, FLAT			1/4		BRASS		34
	2	2		WASHER, INT. LOCK			1/4		BRASS		33
	2	2		WASHER, FLAT			NO. 6				32
	-1	4		WASHER, LOCK			NO. 4				31
	4	4		WASHER FLAT			NO. 4				30
	4	4		NUT, HEX			4-48				29
	2	2		SCREW, PAN HD.			6-32 X 3/4				28
	1	/		REAR BULKHEAD			1140701-3				27
	9 ft	/		CABLE, 3 COND, 14 GA			18107	BELDON			26
	4	4		WASHER, INT. LOCK			NO. 6				25
	1	/		ELAPSED TIME METER			WZ 48/5	CONTROL DYNA.	230V 50 HZ		24
	/	1		CABLE, ASSY			1142816				23
	2	2		FLANGED BUSHING			FB6B-3	BOSTON			22
	2	2		SCREW, PAN HD.			6-32 X 3/8				21
	1	/		FAN			3550 S	PAMOTOR			20
	/	1		ELAPSED TIME METER			WZ 48/5	CONTROL DYNA.	110V 60HZ		19
	/	1		CIRCUIT BREAKER			JA1-A3-A-20-2	HEINEMANN	20 AMP		18
	8	8		HEX NUT			NO. 6				17
	8	8		LOCK WASHER			NO. 6				16
	4	4		PAN HEAD SCREW			6-32 x 3/4 LG				15
	4	4		PAN HEAD SCREW			6-32 x 1/2 LG				14
	1	/		DIAL PLATE			1113276				13
	1	/		KNOB		OPTIONAL	K192 K193 K181	LYREE LYREE SMITHS			12
	1	/		1/4 AMP FUSE			AGC 1/4	BUSS			11
	/	1		RELAY			PR3AG	POTTER & BRAMFIELD	115 VAC		10
	/	1		BUSHING			SR-9P-1	HEYCO			9
	1	/		FUSE HOLDER			HKP	BUSS			8
	1	/		VARIABLE RESISTOR			WW 50Z	CENTRALAB	5K, 5W, TYPE WW		7
	1	/		AMP METER			2025-19	HOYT			6
	/	1		CIRCUIT BREAKER			40-700-P	ETA	1 AMP		5
	1	/		SCREEN			1120972				4
	/	1		FAN			2500S	PAMOTOR			3
	/	1		FUSE PLATE			1130846-1				2
	/	1		REAR BULKHEAD			1140701-1				1

QTY REQD

LIST OF MATERIAL

DASH NO.	NEXT ASSY	USED ON

APPLICATION

UNLESS OTHERWISE SPECIFIED DIMENSIONS ARE IN INCHES
TOLERANCES
DECIMALS .XX = ± .03 .XXX = ± .010 ANGLES ± 1/2°
MACHINE FINISH ✓
DO NOT SCALE DRAWING

MATERIAL:

FINISH:

DRAWN	D.C.	3/8/71
CHECK	B. Nicols	3/8/71
DESIGN		
ENGR		3/8/71
APPR		
APPR		

CONTRACT NO. PD506-10

APPROVED

APPROVED

OPTICAL RADIATION CORPORATION
3825 E. PECK RD., MONROVIA, CALIF. 91016 (213) 445-6133

REAR BULKHEAD ASSEMBLY

SIZE	CODE IDENT NO.		REV
D	33030	1140880	J

SCALE — WEIGHT SHEET 2 OF 2

D 1140880 J

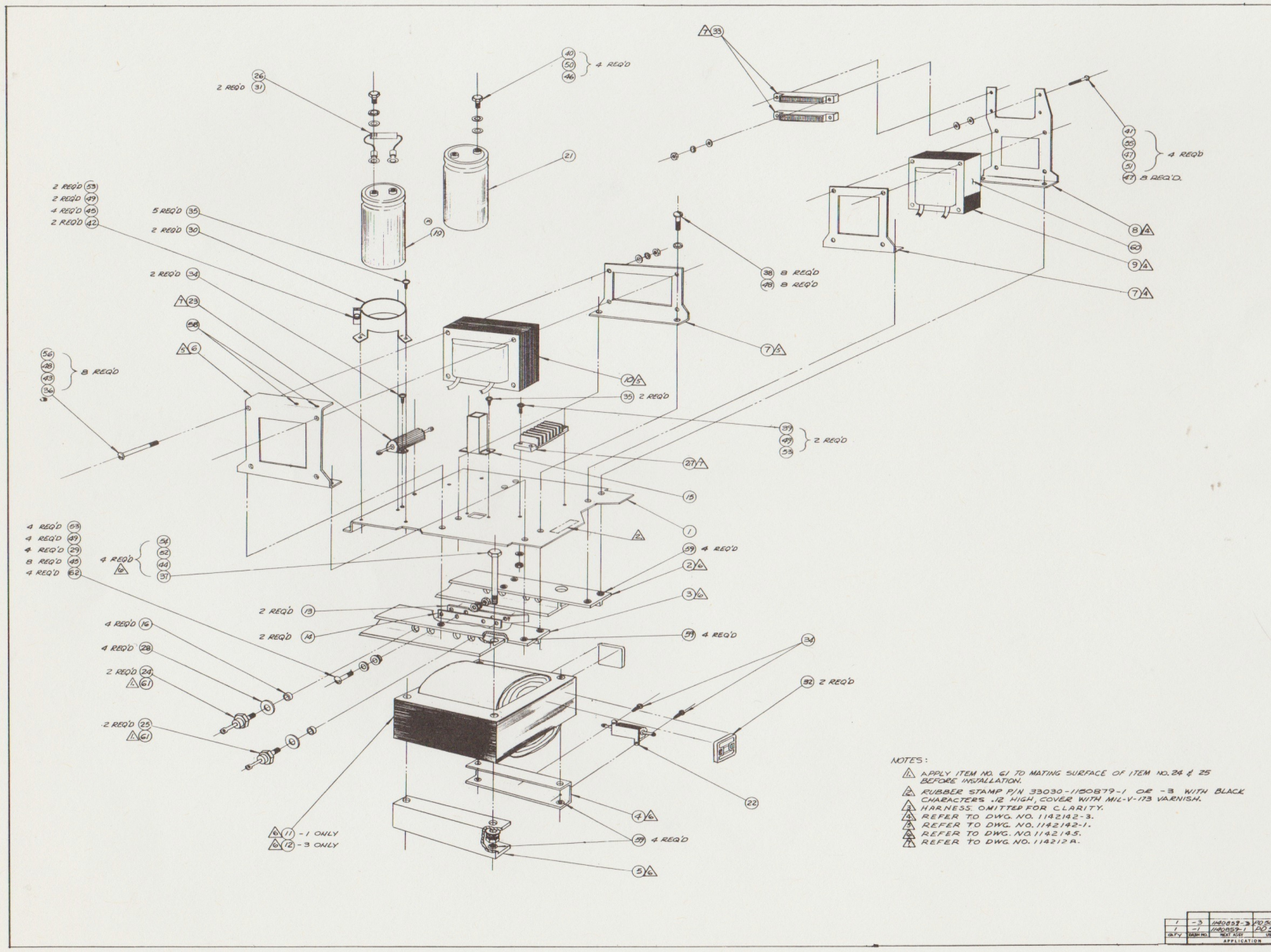

NOTES:

1. APPLY ITEM NO. 61 TO MATING SURFACE OF ITEM NO. 24 & 25 BEFORE INSTALLATION.
2. RUBBER STAMP P/N 33030-1150879-1 OR -3 WITH BLACK CHARACTERS .12 HIGH, COVER WITH MIL-V-173 VARNISH.
3. HARNESS OMITTED FOR CLARITY.
4. REFER TO DWG. NO. 1142142-3.
5. REFER TO DWG. NO. 1142142-1.
6. REFER TO DWG. NO. 1142145.
7. REFER TO DWG. NO. 1142128-A.

QTY	DASH NO.	NEXT ASSY	USED ON
1	-3	1140879-3	RD 5046-00
1	-1	1140879-1	RD 5046-00

APPLICATION

REVISIONS

Zone	LTR	DESCRIPTION	DATE	APPROVED
	D	REVISED & REDRAWN WAS: D 5-25 SEE E.O.# 00741		
	E	CHG. DWG # TO: 1140879 WAS: 1150879 SEE E.O.# 00828	8/1/68	
	F	1) ADDED ITEM 17. 2) ADDED NOTES 3, 4 E.O.# REF E.O. 00201.	8/14/68	
	G	ITEM 26 WAS: DALE ITEM 28 -1 & -3 QTY WAS: 4 ITEM 30 WAS: CINCH #8 ITEM 48 -1 & -3 QTY WAS: 16 E.O.# 00821	6-4-70	
	H	ITEM 39 WAS: 4-72 x 7/8" LG. E.O. 00828	6-24-70	
	J	ITEM # 47 QTY. WAS 4. ITEM 57 WAS SPACER #2341, QTY. 4	7/14/72	
	K	ADD: ITEM 20 CHANGE: ITEM 21 QTY WAS QTY 21-3 CHANGE: ITEM #24 WAS 1N1183 CHANGE: ITEM #25 WAS 1N1183R REF E.O. 00463 & 00440	7/21/72	
	L	ADD ITEM # 4 NOTE 4 REF E.O. # 00513 ITEM 32 WAS QTY. 6 ADD: ITEM 62 REF E.O.# 00537	3/1/73	
	M	REMOVED ITEM 20 & NOTE 8 REF E.O. # 00580	3/14/73	

QTY REQD			NOMENCLATURE OR DESCRIPTION	REF Ltr	CODE IDENT	PART OR IDENTIFYING NO.	SPECIFICATION	MATERIAL OR NOTE	ZONE	ITEM NO.
4	4		SCREW, PAN HD			6-32 x 5/8		NYLON		62
1/16	1/16		THERMAL COMP				MARZFIELD			61
1/2	1/2		FISH PAPER			560	G.C.ELEC.CO			60
12	12		NUTSERT			9507-10	AVDEL			59
2	2		NUTSERT			9505-04	AVDEL			58
										57
8	8		NUT, HEX			10-32				56
4	4		NUT, HEX			4-40				55
4	4		NUT, HEX			1/4-20				54
8	8		NUT, HEX			6-32				53
4	4		WASHER, LOCK			#8				52
4	4		WASHER, LOCK			#4				51
4	4		WASHER, INT LOCK			#10				50
8	8		WASHER, LOCK			#6				49
8	8		WASHER, LOCK			#10				48
8	8		WASHER, FLAT			#4				47
4	4		WASHER, FLAT			#10		BRASS		46
12	12		WASHER, FLAT			#6				45
4	4		WASHER, FLAT			1/4				44
8	8		WASHER, FLAT			#10				43
2	2		SCR, PAN HD			6-32 x 3/16 LG				42
4	4		SCR, ROUND HD			4-40 x 7/16 LG				41
4	4		SCR, HEX HD			10-32 x 3/4 LG		BRASS		40
4	4		SCR, PAN HD			6-32 x 3/4 LG				39
8	8		SCR, PAN HD			10-32 x 3/4 LG				38
4	4		SCR, HEX HD			1/4-20 x 3 LG				37
8	8		SCR, PAN HD			10-32 x 2 LG				36
7	7		SCR, SELF TAPPING			#6 x 1/4 LG				35
4	4		SCR, SELF TAPPING			#4 x 1/4 LG				34
2	2		CONNECTOR			250-15-30-180	CINCH-JONES			33
2	2		TT-ROLP W/B PAD			ABMS-A-D	PACKOUT			32
2	2		TERMINAL, INSUL.			MRB-10	T. B			31
2	2		CLAMP, CAP			V2-10	SPRAGUE			30
4	4		WASHER SHLDR			2663	H.H. SMITH			29
8	8		WASHER, MICA			5624-15-2	SEASTROM			28
1	1		TERMINAL STRIP			3546-06-00	CINCH-JONES			27
1	1		RESISTOR			1000 Ω, 2W				26
2	2		DIODE			1N1183AR	I. R.			25
2	2		DIODE			1N1183 A	I. R.			24
1	1		RESISTOR			50W, 0.01Ω, 3%	DALE			23
1	1		RESISTOR			50W, 1Ω, 3%	DALE			22
1	2		CAPACITOR			36D253G040CC2A	SPRAGUE			21
										20
1	1		CAPACITOR			17E40C1Z0B2	STM			19
										18
1	1		HARNESS ASSY			1142128-1				17
4	4		BUSHING			1121309-1				16
1	1		AIRDUCT			1110962-1				15
2	2		INSULATOR			1111723-1				14
2	2		BUSS BAR			1110873-1				13
1	1		TRANSFORMER			1142080-1				12
1	1		TRANSFORMER			1140836-1				11
1	1		CHOKE			1130831-1				10
1	1		CHOKE			1130831-3				9
1	1		BKT. CONN MTG			1131726-1				8
2	2		MTG ANGLE CONN.			1131724-1				7
1	1		BKT CHOKE MTG			1131725-1				6
1	1		MTG CHANNEL			1130839-3				5
1	1		MTG. CHANNEL			1130839-1				4
1	1		SUPPORT BOLT			1130838-1				3
1	1		SUPPORT BOLT			1130837-1				2
1	1		MTG PLATE			1140850-1				1

LIST OF MATERIAL

UNLESS OTHERWISE SPECIFIED DIMENSIONS ARE IN INCHES
TOLERANCES
DECIMALS .XX ± .03 .XXX ± .010
ANGLES ± 1.0°
MACHINE FINISH ✓
DO NOT SCALE DRAWING

MATERIAL
FINISH

DRAWN J.K. 4-12-72
CHK'D
DESIGN
ENGR
APPR
APPR
CONTRACT NO. 00506
APPROVED

OPTICAL RADIATION CORPORATION
ORC
POWER SUPPLY ASSEMBLY

SIZE | CODE IDENT NO. 33030 | 1140879 | REV M
SCALE | WEIGHT | SHEET 1 OF 1

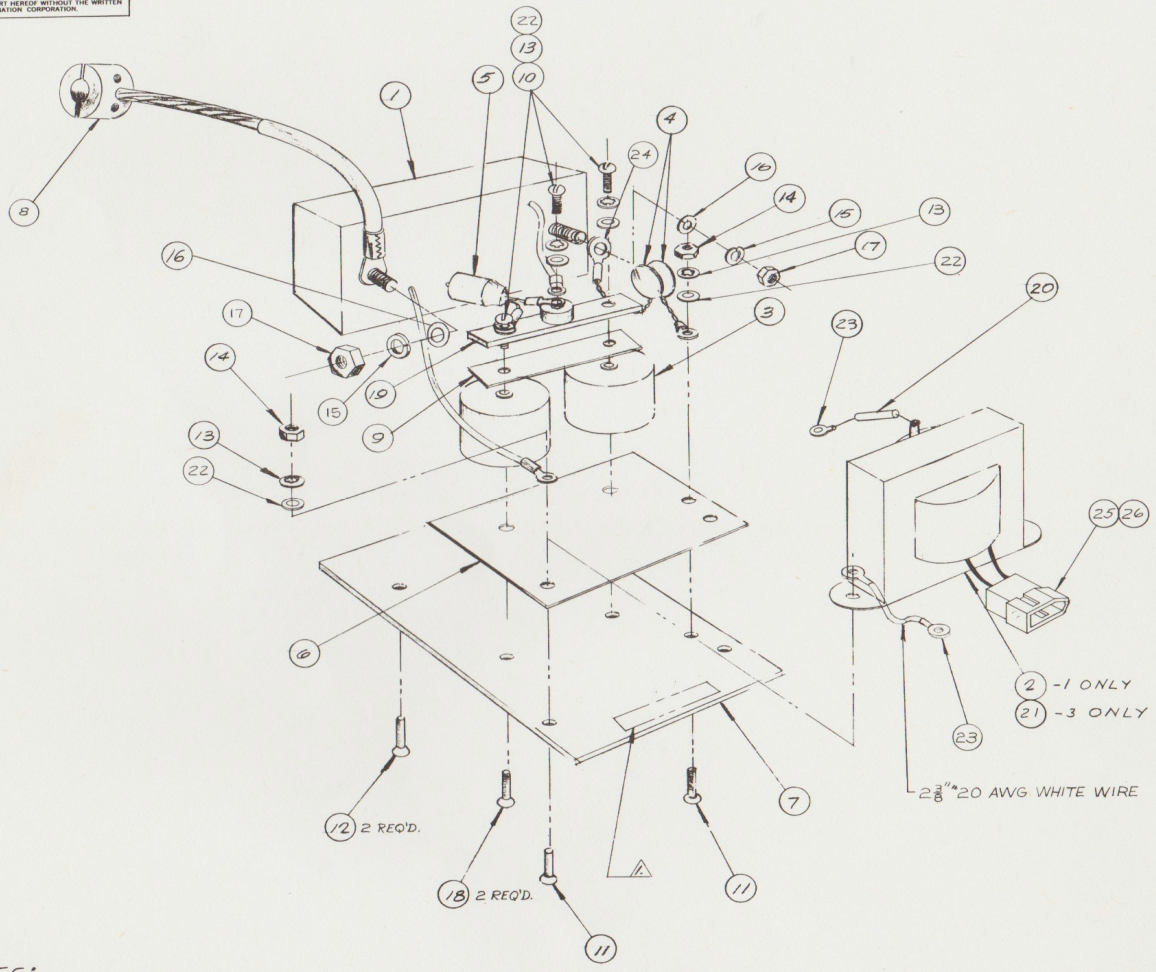

NOTES:

⚠ RUBBER STAMP PART NO. "33030-1140887-1" OR "-3" AS REQD WITH BLACK CHARACTERS .12 HIGH, COVER WITH MIL-V-173 VARNISH

REVISIONS

ZONE	LTR	DESCRIPTION	DATE	APPROVED
	A	ITEM 2 PART NO. WAS LPA6011	2-7-72	
	B	ADD: NOTE 1, ITEMS 19, 20 ITEM 8 DEL., ITEM 13 WAS QTY 5 ITEM 10 WAS 8-32x1/4 QTY 2 REF EO# 00126	3-18-72	
	C	1.) ADDED -3 QUANTITIES TO L/M. 2.) ADDED ITEM 21. (3) ADDED P/N TO ITEM 19. REF. E.O. # 00149	3/24/72	
	D	ITEM 2 WAS: -1 QTY 1 EO# 00191 ITEM 21 WAS: -3 QTY 1 ADD: ITEM 22 ADD: -1 USED ON PD 506-0		
	E	ITEM 2 WAS: 1141813 ADD: P/N TO ITEM 3 & 4 ITEM 21 WAS: LPA6011, COMP SPEC 230V, 50HZ EO# 00221	4/4/72	
	F	ITEM 5 WAS 5GSP 5000 SPARKGAP REF EO# 00121	6/8/72	
	G	UPDATED	7-14-72	
	H	ITEM 20 WAS: TEST PROD. WIRE 5000V P/N 8897-1000-18 AWG-BELDEN EO# 00408	11-2-72 JK	
	J	REVISED PER E.O. 00484	1/8/73	

QTY REQD -3	-2	-1	SYM.	NOMENCLATURE OR DESCRIPTION	REF DES	CODE IDENT	PART OR IDENTIFYING NO.	SPECIFICATION	MATERIAL OR NOTE	ZONE	ITEM NO.
2	2			TERMINAL, PIN			1190TL		MOLEX		26
1	1			CONNECTOR			1396P		MOLEX		25
1	1			RING LUG			#1/4				24
1	6			RING LUG			#8				23
5	5			FLAT WASHER			#8				22
1	/			TRANSFORMER			1141813-3				21
1	1			RESISTOR	R6		4866	30KΩ, 11W	OHMITE		20
1	1			INSULATOR S.G.			1111681				19
2	2			FLT HD SCR			8-32x1/4 LG				18
2	2			HEX NUT, BRASS			1/4-20				17
2	2			FLAT WASHER BRASS			1/4				16
2	2			LOCK WASHER BRASS			1/4				15
3	3			HEX NUT			8-32				14
5	5			INTERNAL LOCK WASHER			NO. 8				13
2	2			FLAT HEAD SCREW			10-32x3/8				12
3	3			FLAT HEAD SCR			8-32x1/2				11
3	3			PAN HEAD SCREW			8-32x3/8				10
1	/			BRASS STRIP			1100258-1				9
1	1			FRONT LAMP CLAMP			1130638				8
1	/			PLAT FORM			1100177-1				7
1	/			GRID PLATE			1100246-1				6
1	/			SPARKGAP			1122349				5
2	2			CAPACITOR			30GA-D50	50 Sumf, 3KV	SPRAGUE		4
2	2			CAPACITOR			15C	[illegible]	SPRAGUE		3
/	1			TRANSFORMER			[illegible]-1				2
1	/			RFX TRANSFORMER ASSY			1100452				1

LIST OF MATERIAL

QTY	DASH NO.	NEXT ASSY	USED ON
1	-1	1152416	PD 506-1L
1	-1	1100174	PD 506-0
1	-3	1140887-3	PD-506-1000B
1	-1	1140887-1	PD506-10

APPLICATION

UNLESS OTHERWISE SPECIFIED DIMENSIONS ARE IN INCHES
TOLERANCES
DECIMALS .XX = ± .03 .XXX = ± .010
ANGLES ± 1/2°
MACHINE FINISH
DO NOT SCALE DRAWING

MATERIAL:

FINISH:

DRAWN	D.C.	3/8/71
CHECK	E. TAYLOR	7-28-72
DESIGN		
ENGR		3/8/71
APPR		
APPR		

CONTRACT NO. PD506-10

APPROVED

APPROVED

OPTICAL RADIATION CORPORATION
1826 S. PECK RD., MONROVIA, CALIF. 91016 (213) 446-8133

IGNITER ASSY

SIZE	CODE IDENT NO.		REV
D	33030	1140887	J

SCALE | WEIGHT | SHEET 1 OF 1

D 1140887 J

NOTES:

1. FOR -1 ASSY (STANDARD 35 MM ASSY) RUBBER STAMP PART NO. 33030-1141036-1 ASSY., WITH WHITE CHARACTERS .12 HIGH, COVER WITH MIL-V-173 VARNISH. (MODEL 1000)
2. FOR -3 ASSY (16 MM ASSY) RUBBER STAMP PART NO. 33030-1141036-3 ASSY, WITH WHITE CHARACTERS .12 HIGH, COVER WITH MIL-V-173 VARNISH.
3. FOR -5 ASSY (WIL-KIN 35 MM ASSY) RUBBER STAMP PART NO. 33030-1141036-5 ASSY., WITH WHITE CHARACTERS .12 HIGH, COVER WITH MIL-V-173 VARNISH. (MODEL 1600/2500)
4. FOR -7 ASSY (STANDARD 35 MM ASSY) RUBBER STAMP PART NO. 33030-1141036-7 ASSY., WITH WHITE CHARACTERS .12 HIGH, COVER WITH MIL-V-173 VARNISH.

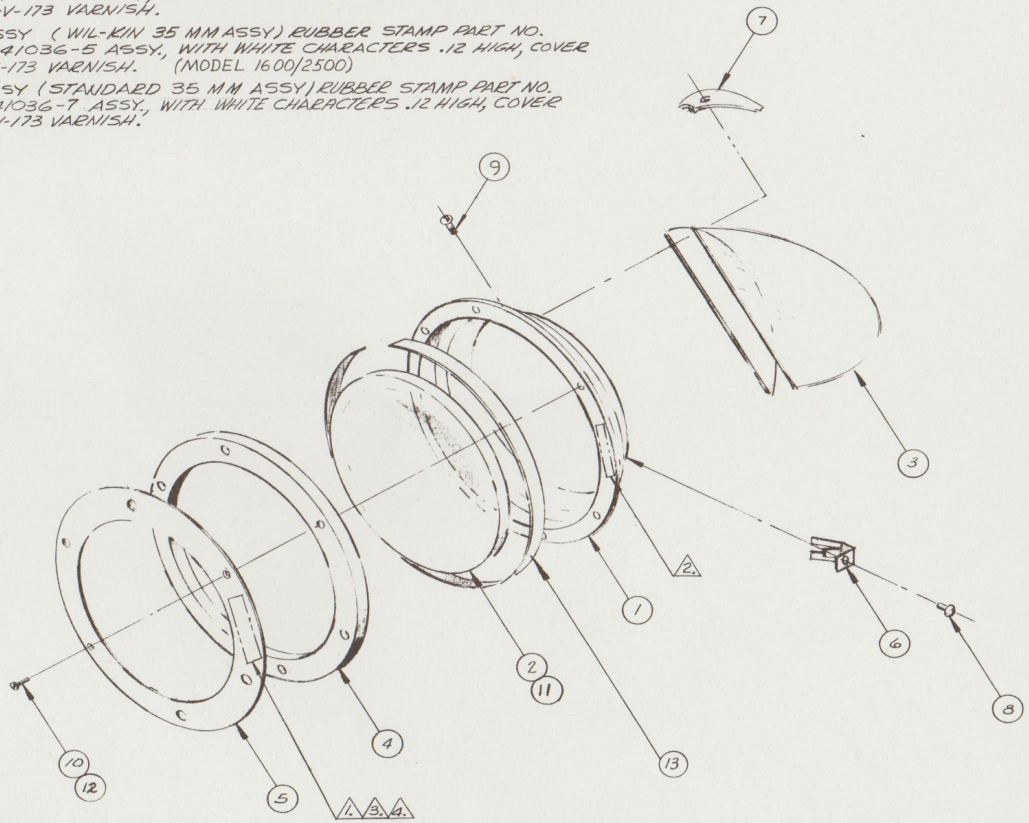

REVISIONS

ZONE	LTR	DESCRIPTION	DATE	APPROVED
	A	ADD: NOTES 3,4,5, REF EO.# 00118	3-17-72	
	B	REVISED NOTES, ADDED -5, -7 AND -9 ASSYS	7-15-72	
	C	1) ADD MODEL 1000 TO NOTE 1 2) ADD MODEL 1600/2500 TO NOTE 4. 3) REMOVE NOTE 3 AND -9 FROM 1/M 4) CHANGE -9 TO -3 IN APPL. BLOCK. 5) ADD ITEM 13 TO 1/M, GASKET, RUBBER, 1112784. QTY. 1 IN -1 AND -5 CONFIGURATION. 6) ADD ITEM 13 TO FACE OF DWG.	11-15-72	

LIST OF MATERIAL

-7	-5	-3	-2	-1	SYM.	NOMENCLATURE OR DESCRIPTION	REF DES	CODE IDENT	PART OR IDENTIFYING NO.	SPECIFICATION	MATERIAL OR NOTE	ZONE	ITEM NO.
	1			1		RUBBER, GASKET			1112784				13
	2					SCREW FLAT HD.			#4-40 X 7/16 LG				12
1				1		NEG. LENS			1100514				11
2				2		SCREW FLAT HD.			#4-40 X 9/16 LG.				10
2		2				SCREW PAN HD.			#6-32 X 3/8 LG.				9
2		2				SCREW PAN HD.			#4-40 X 1/4 LG.				8
2		2				FILTER RETAINER			1110908				7
2		2				FILTER CLIP			1110909				6
1	1			1		RETAINER			1130626				5
	1					SPACER			1130808				4
2		2				HOT MIRROR			1100507-7				3
	1					NEG. LENS U.V.			1130765				2
1	1	1		1		NEG. LENS ADAPTER		33030	1100375				1

QTY REQD

QTY.	DASH NO.	NEXT ASSY	USED ON
1	-3	1100174	PD506-000
	-7	1100174	PD506-000
1	-5	1152416	PD506-1L
1	-3	1140859-3	PD506-1000B
1	-3	1140859-1	PD506-010
1	-1	1140859-3	PD506-1000B
1	-1	1140859-1	PD506-010

APPLICATION

UNLESS OTHERWISE SPECIFIED DIMENSIONS ARE IN INCHES
TOLERANCES
DECIMALS .XX = ± .03 .XXX = ± .010
ANGLES ± 1/2°
MACHINE FINISH ✓
DO NOT SCALE DRAWING

MATERIAL:

FINISH:

DRAWN	B. NICELY	5/24/71
CHECK	R. TAYLOR	
DESIGN		
ENGR		
APPR	R. Taylor	6-1-72
APPR		
CONTRACT NO.	PD-506	
APPROVED	R. Taylor	6-1-72
APPROVED	Jim Ottra	11-17-72

OPTICAL RADIATION CORPORATION
3000 S. PECK RD., MONROVIA, CALIF. 91016 (213) 445-6139

FRONT ADAPTER ASSY.

SIZE	CODE IDENT NO.		REV
D	33030	1141036	C

SCALE | WEIGHT | SHEET 1 OF 1

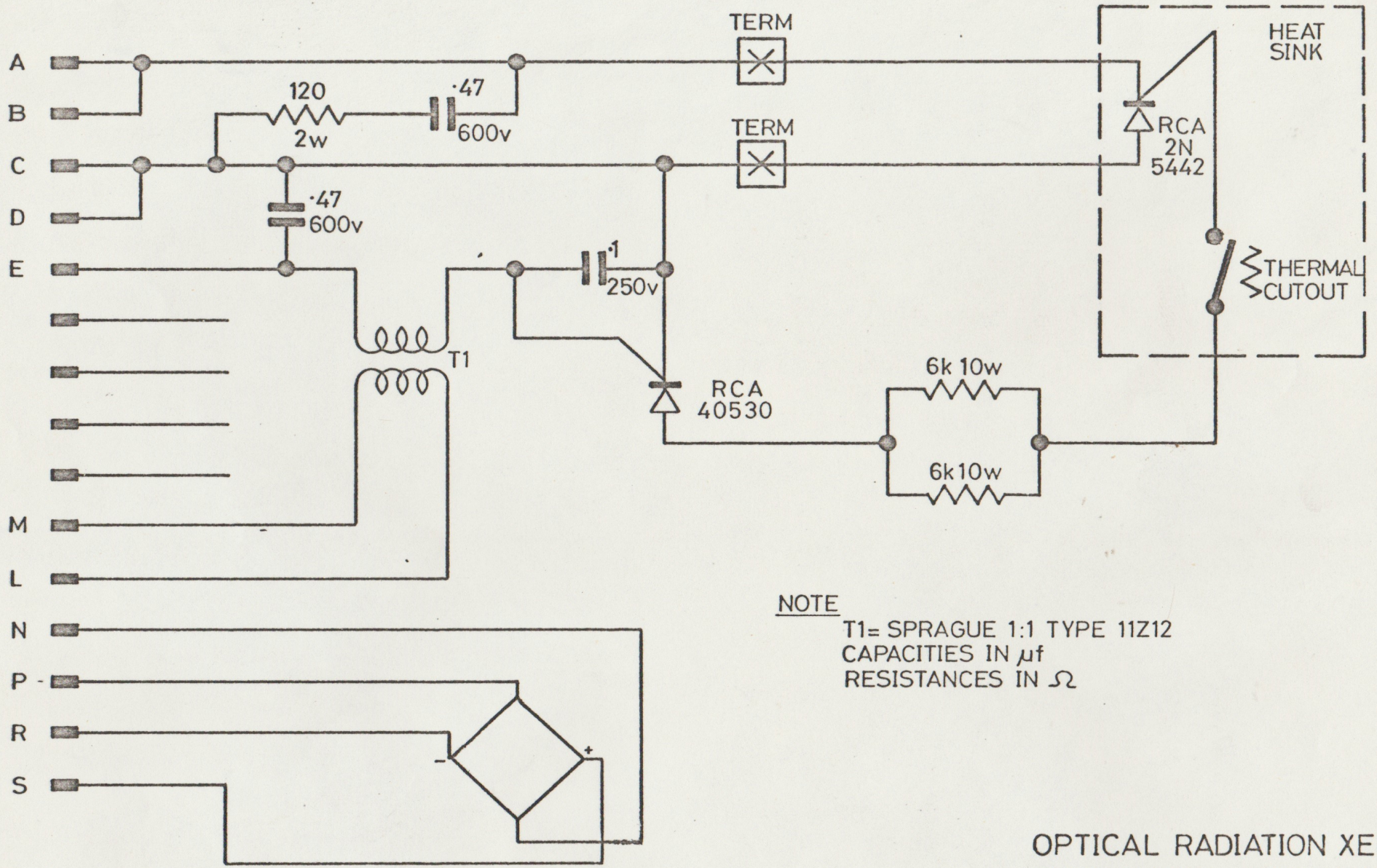

NOTE

T1= SPRAGUE 1:1 TYPE 11Z12
CAPACITIES IN μf
RESISTANCES IN Ω

OPTICAL RADIATION XENON ARC
TYPE 1000B TRIAC BOARD

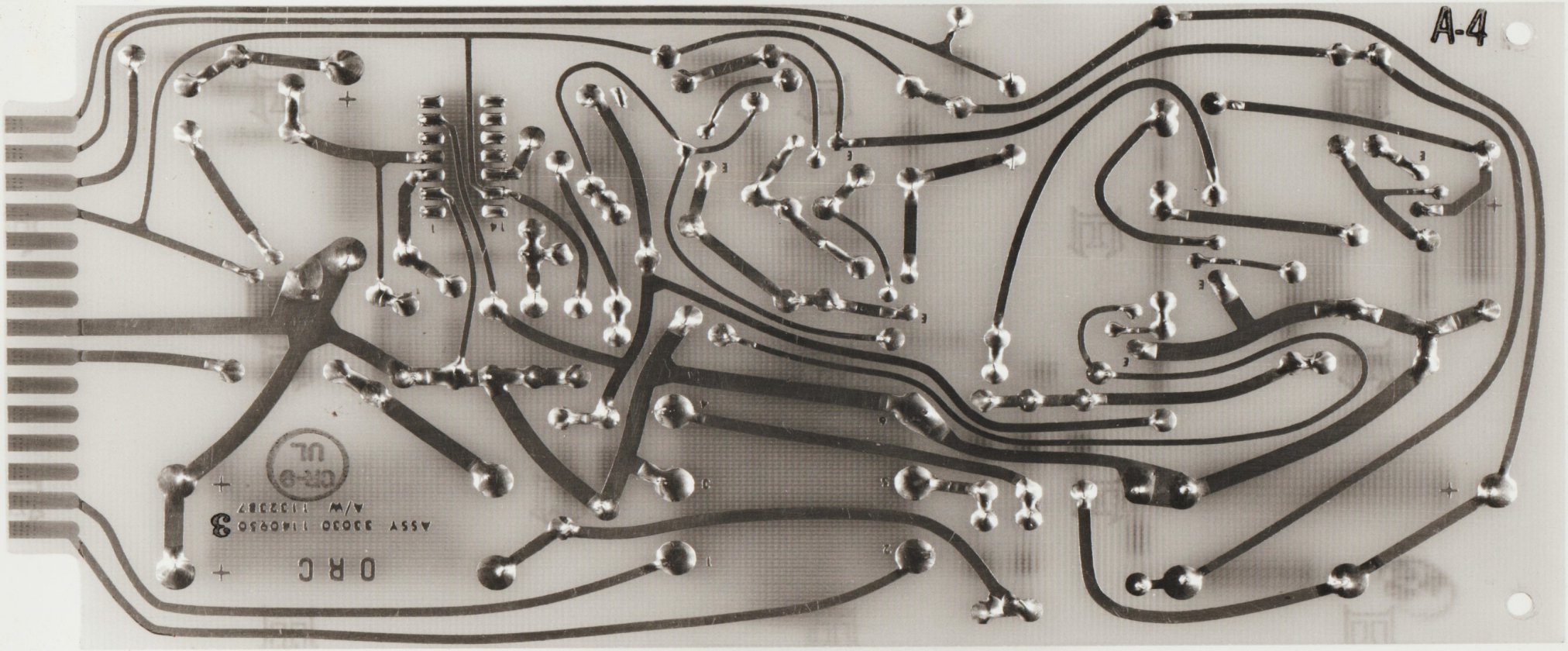
A-4
ORC
ASSY 33030 1140950 3
A/W 1122287
CR-9
UL

SPRAGUE ATOM
TVA-1208
250UF-25VDC
USA7308H
30D
TE-1069.1
600-3D.C.
USA7321H
SPRAGUE
30D
TE-1208
35-250C
USA7326H
RCA CA3030
324
SIGNAL TRANSFORMER CO. INC.
BROOKLYN, N.Y. U.S.A.
PIN 2 PIN 5 PIN 6
PIN 1 PIN 3 PIN 4
SPRAGUE ATOM
TVA-1208
250UF-25VDC
USA7308H
10µF
20V10%

MEMCOR
6000Ω
MEMCOR
6000Ω
SPRAGUE
11Z12
electrocube
.47±20%600V
625B1F474M
306
electrocube
.47±20%600V
625B1F474M
306
A-6

ORC
7
A
C
G
C
+