KALEE

Model Twelve Projector Mechanism

SPARE PARTS LIST

MANUFACTURERS :

A. KERSHAW & SONS, LTD.
LEEDS.

SOLE DISTRIBUTORS :

G.B.-KALEE LIMITED.

Head Office :

NATIONAL HOUSE, 60/66, Wardour Street,
LONDON, W.1.

Telephone :
GERrard 5137-8-9

Telegrams :
Ellangrica Rath London

JULY 1st, 1943.

KALEE

Model Twelve Projector Mechanism

Spare Parts List

IMPORTANT.

When ordering spare parts always specify the list numbers of the parts and the serial number of the mechanism for which they are required.

Note: Plates 1 to 6 inclusive illustrate parts which are applicable to mechanisms earlier than, and including, Serial No. 16231.

Mechanisms later than, and including Serial No. 16232, embody certain replacements of the foregoing parts and additional components, which are illustrated in Plate 7.

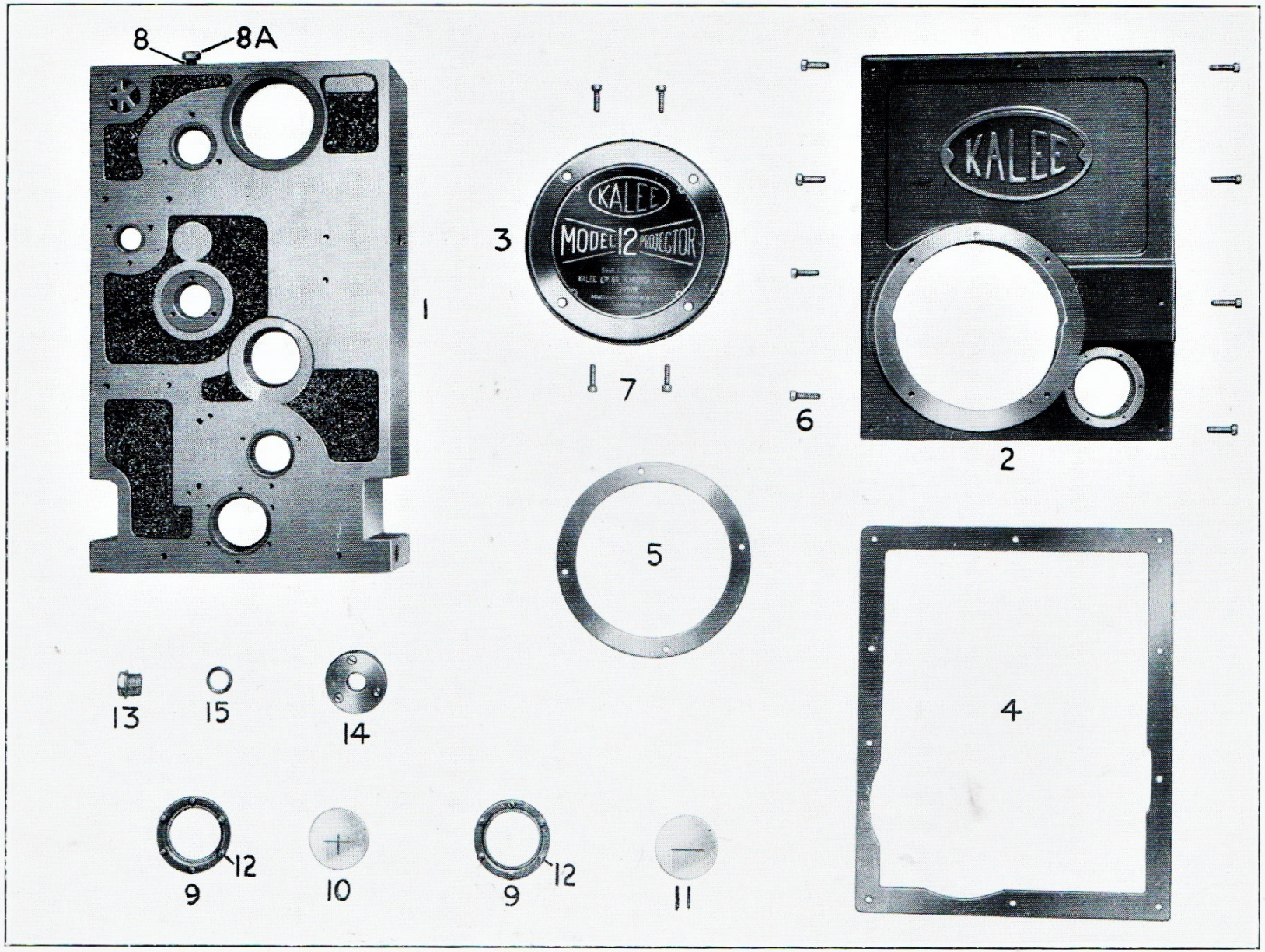
8
8A
1
3
KALEE
MODEL 12 PROJECTOR
7
6
KALEE
2
5
4
13
15
14
12
9
10
12
9
11

PLATE 1

IMPORTANT:

Quote Mechanism Serial Number When Ordering Spare Parts.

No.	PLATE 1.	EACH £	s.	d.
W. 1	Frame, Main			
W. 2	Cover, Main Frame			
W. 3	Cover, Inspection			
W. 4	Gasket, Main Frame Cover		2	6
W. 5	Gasket, Inspection Cover		1	9
W. 6	Screws, Main Frame Cover			8
W. 7	Screws, Inspection Cover			6
W. 8	Bolt, Top Spool Arm Fixing		1	0
W. 8a	Nut, Top Spool Arm Fixing			8
W. 9	Flange, Window		6	0
W.10	Window, Main Frame Oil Level		2	6
W.11	Window, Cover Oil Level		2	6
W.12	Screws, Window Flange Securing			4
W.13	Plug, Oil Drain		2	9
W.14	Housing, Shutter Spindle Bearing		12	0
W.15	Washer, Oil Drain Plug			8

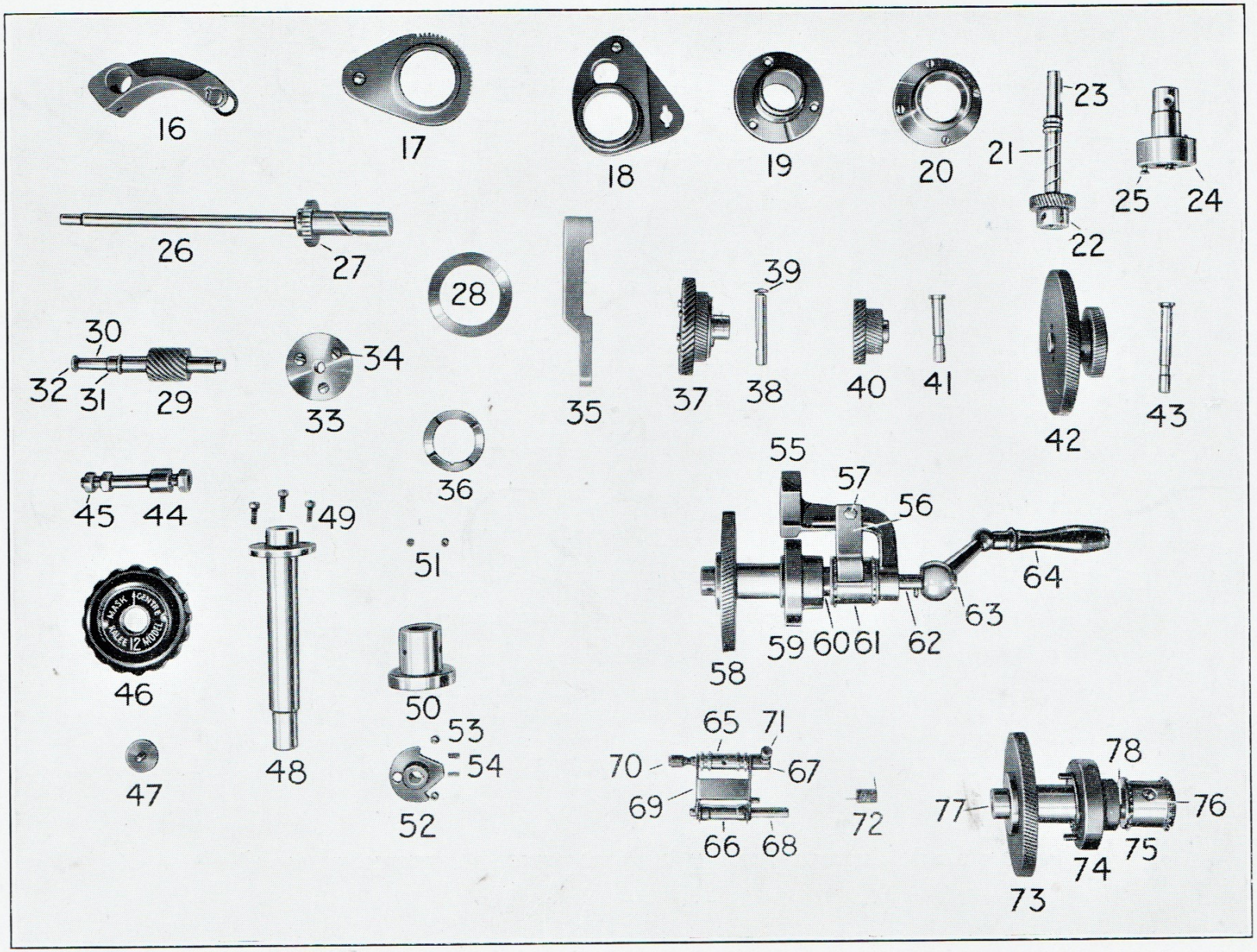
16
17
18
19
20
21
22
23
24
25
26
27
28
29
30
31
32
33
34
35
36
37
38
39
40
41
42
43
44
45
46
47
48
49
50
51
52
53
54
55
56
57
58
59
60
61
62
63
64
65
66
67
68
69
70
71
72
73
74
75
76
77
78
KALEE 12 MODEL

PLATE 2

IMPORTANT:

Quote Mechanism Serial Number When Ordering Spare Parts.

PLATE 2.

No.		EACH £	s.	d.
W.16	Fork, Compensator	1	4	0
W.17	Cam, Compensating	1	4	0
W.18	Sleeve, Compensating Cam	1	10	0
W.19	Bearing, Intermittent Unit	1	10	0
W.20	Deflector, Inter Unit Bearing Oil		16	0
W.21	Spindle, Main Drive	1	1	6
W.22	Gear, Main Drive	1	1	6
W.23	Key, Woodruff			8
W.24	Bearing, Main Spindle	1	15	0
W.25	Screws, Bearing Securing			8
W.26	Shaft, Masking Pinion	1	4	0
W.27	Pinion, Masking Spindle		12	0
W.28	Washer, Spring		2	0
W.29	Gear, Shutter Spindle Spiral		18	0
W.30	Spindle, Shutter		12	0
W.31	Thrower, Oil		2	9
W.32	Screws, Shutter Securing		1	3
W.33	Boss, Compensating Cam		12	0
W.34	Screws, Comp. Cam Boss Securing			6
W.35	Compensating Link		17	0
W.36	Lock Ring, Inter. Unit Bearing		8	6
W.37	Gear, Top Intermediate	2	10	6
W.38	Spindle, Top Intermediate Gear		7	3
W.39	Screw, Top Intermediate Gear Securing		1	0
W.40	Gear, Centre Intermediate	1	15	0
W.41	Spindle, Centre Intermediate Gear		7	3
W.42	Gear, Lower Intermediate	2	10	0
W.43	Spindle, Lower Intermediate Gear		7	3
W.44	Stud, Intermittent Unit Fixing		7	3
W.45	Nut, Stud			6
W.46	**Knob, Masking Only**	**1**	**0**	**6**

No.		EACH £	s.	d.
W.47	Screw, Masking Knob Securing		1	3
W.48	Bearing, Masking Spindle	1	15	0
W.49	Screws, Masking Spindle Bearing Securing			8
W.50	Shell, Clutch		16	3
W.51	Screws, Clutch Shell Securing			8
W.52	Hub, Clutch	1	1	0
W.53	Roller, Clutch		1	9
W.54	Spring, Clutch Roller			8
W.55	Bearing, Outer		18	0
W.56	Stripper, Lower Sprocket		2	9
W.57	Screw, Stripper			8
W.58	Gear, Lower Spindle	1	16	0
W.59	Bearing, Lower Spindle	2	2	0
W.60	Oil Thrower, Lower Sprocket Spindle Bearing		3	4
W.61	Sprocket, Lower Feed	1	9	0
W.62	Spindle, Lower Feed Sprocket	1	1	6
W.63	Screw, Handle		1	0
W.64	Handle and Crank	1	9	0
W.65	Roller, Pressure		6	0
W.66	Roller, Guide		6	0
W.67	Shaft, Pressure Roller		5	6
W.68	Shaft, Guide Roller		5	6
W.69	Frame, Roller Bracket		4	9
W.70	Knob, Shaft		1	9
W.71	Screw, Adjusting			8
W.72	Spring, Tension		1	3
W.73	Gear, Top Spindle	1	16	0
W.74	Bearing, Top Sprocket Spindle	2	2	0
W.75	Sprocket, Top Feed	1	9	0
W.76	Screw, Top Feed Sprocket Securing		1	3
W.77	Spindle, Top Feed Sprocket		14	6
W.78	Oil Thrower, Top Sprocket Spindle Bearing		3	4

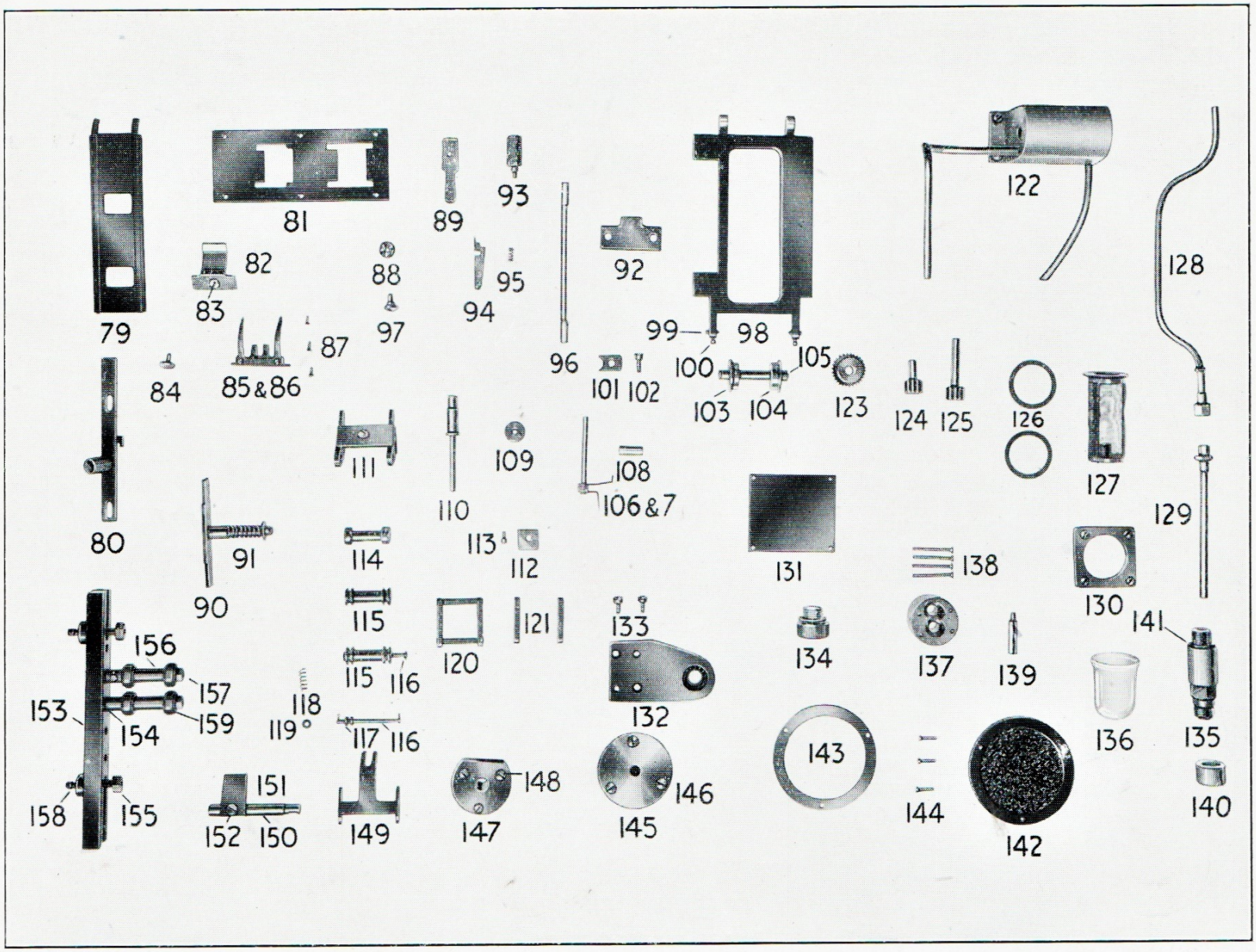
79
80
81
82
83
84
85&86
87
88
89
90
91
92
93
94
95
96
97
98
99
100
101
102
103
104
105
106&7
108
109
110
111
112
113
114
115
116
117
118
119
120
121
122
123
124
125
126
127
128
129
130
131
132
133
134
135
136
137
138
139
140
141
142
143
144
145
146
147
148
149
150
151
152
153
154
155
156
157
158
159

PLATE 3

IMPORTANT:

Quote Mechanism Serial Number When Ordering Spare Parts.

PLATE 3.

No.		EACH £	s.	d.
W.79	Plate, Mask	1	0	0
W.80	Latch, Gate		7	6
W.81	Plate, Gate C'pte	1	10	0
W.82	Stripper, Intermittent Sprocket		4	0
W.83	Screw, Stripper Securing			8
W.84	Screw, Gate Latch Retaining		1	0
W.85	Spring, Upper Skate Tension		3	6
W.86	Spring, Lower Skate Tension		3	6
W.87	Screws, Gate Plate Securing			6
W.88	Nuts, Spring Adjusting		1	6
W.89	Lever, Release		2	3
W.90	Bar, Pressure		4	0
W.91	Spring, Pressure Bar			6
W.92	Bracket, Gate Hinge Catch		3	6
W.93	Screw, Latch Guide		1	3
W.94	Catch, Release		3	0
W.95	Spring, Release Catch			8
W.96	Pin, Hinge		2	9
W.97	Screw, Roller Bracket Securing			8
W.98	Frame, Gate	2	5	0
W.99	Pivot, Guide Roller Spindle			8
W.100	Screw, Pivot Securing			3
W.101	Clip, Eccentric Spindle		1	4
W.102	Screw, Clip			6
W.103	Roller, Pressure		12	6
W.104	Roller, Guide		12	6
W.105	Collar, Guide Roller Spindle		1	0
W.106	Spring, Roller Bracket R.H.			6
W.107	Spring, Roller Bracket L.H.			6
W.108	Tube, Spacing		1	0
W.109	Nut, Tension		1	0
W.110	Spindle, Eccentric		7	6
W.111	Bracket, Roller		10	0
W.112	Clip, Hinge Pin		1	4
W.113	Screw, Hinge Pin Clip Securing			4
W.114	Roller, Guide		5	6
W.115	Roller, Lower		6	0
W.116	Spindle, Lower Roller		1	3
W.117	Collar, Lower Roller		1	3
W.118	Spring, Tension			4
W.119	Washer, Tension		1	0

No.		EACH £	s.	d.
W.120	Runner, Film		4	6
W.121	Skate, Film (Per Pair)		2	6
W.122	Tank, Complete Oil	2	0	0
W.123	Gear, Pump Drive		12	0
W.124	Gear, Pump Driven		9	0
W.125	Gear, Pump Driving		12	0
W.126	Packing Ring, Oil Sight		1	0
W.127	Filter, Oil		7	6
W.128	Pipe, Main Oil Supply		9	0
W.129	Pipe, Sight Feed		5	9
W.130	Gland, Sight Feed		7	6
W.131	Label, Instruction		3	3
W.132	Bracket, Shutter Spindle		12	0
W.133	Screw, Shutter Spindle Bracket Securing			6
W.134	Plug, Oil Filter		3	6
W.135	Drain, Oil		9	0
W.136	Sight, Transparent Oil		2	3
W.137	Body, Oil Pump		12	0
W.138	Screws, Body Securing			6
W.139	Tube, Supply Pipe Inlet		2	0
W.140	Cap, Oil Drain		2	6
W.141	Washer, Oil Drain			8
W.142	Cover, Speed Indicator Recess		5	0
W.143	Gasket, Recess Cover		1	0
W.144	Screws, Recess Cover Securing			4
W.145	Boss, Oil Pump		9	0
W.146	Screws, Oil Pump Boss Securing			6
W.147	Boss, Compound Gear Spindle		8	0
W.148	Screws, Compound Gear Spindle Boss Securing			6
W.149	Shoe, Roller Bracket		4	9
W.150	Spindle, Stripper		4	9
W.151	Stripper		2	0
W.152	Screw, Stripper Securing			8
W.153	Bracket, Guide Roller		12	0
W.154	Spindle, Guide Roller		4	0
W.155	Nut, Bearing Securing			6
W.156	Tube, Distance		1	6
W.157	Nut, Bracket Securing			6
W.158	Stud, Bracket		2	0
W.159	Washers Guide, with Ball Race		4	0

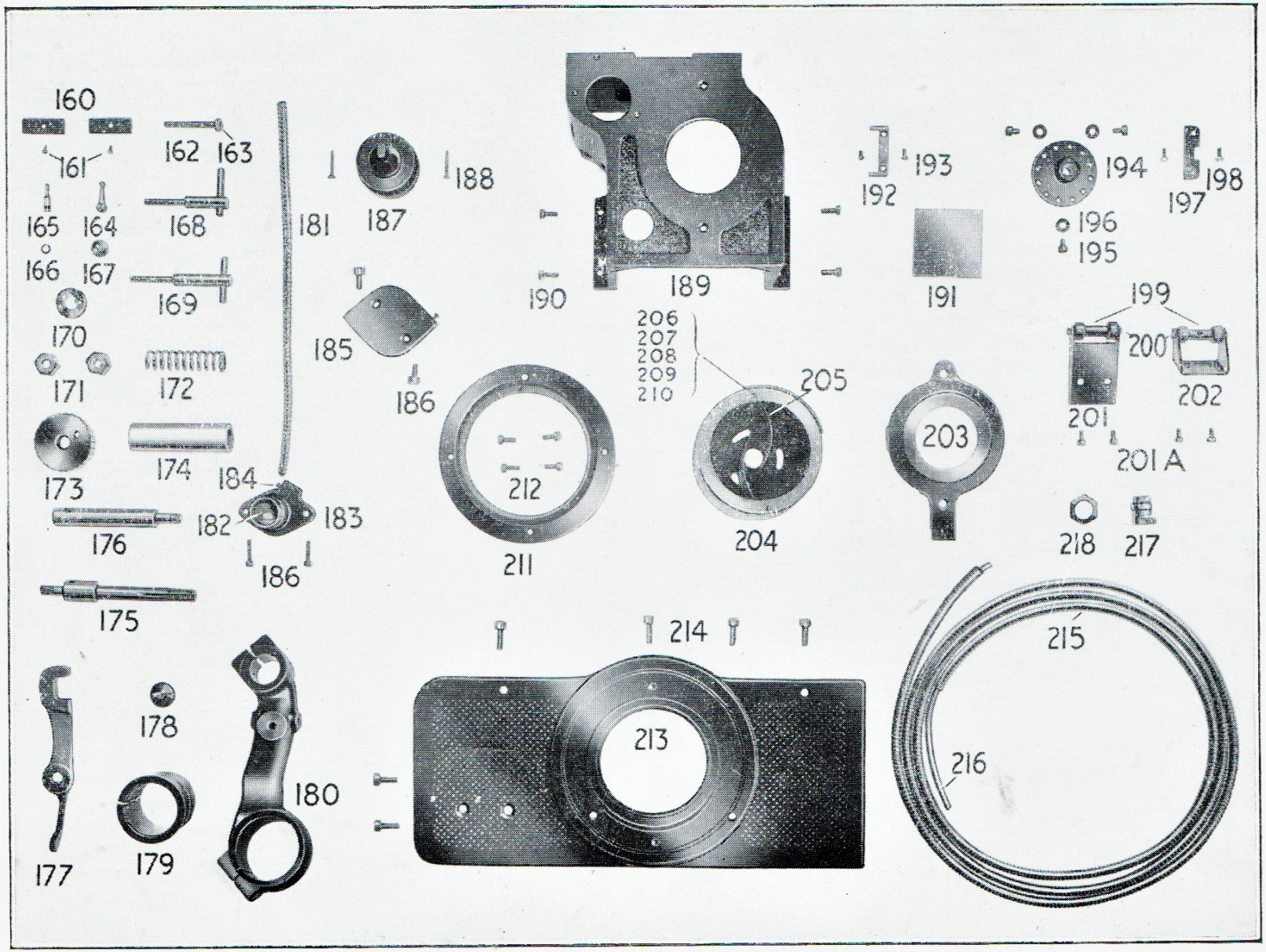
160
161
162
163
165
164
168
166
167
169
170
171
172
173
174
176
175
177
178
179
180
181
182
183
184
185
186
187
188
189
190
191
192
193
194
195
196
197
198
199
200
201
201 A
202
203
204
205
206
207
208
209
210
211
212
213
214
215
216
217
218

PLATE 4

IMPORTANT:

Quote Mechanism Serial Number When Ordering Spare Parts.

No.		EACH £	s.	d.
	PLATE 4.			
W.160	Clip, Window		1	0
W.161	Screws, Window Clips Securing			4
W.162	Screw, Adjusting		2	6
W.163	Nut, Lock			6
W.164	Lever, Locking		2	0
W.165	Stud, Locking		1	9
W.166	Washer, Packing			8
W.167	Screw, Focussing Nut Stop		1	3
W.168	Screw, Thumb (Clamping Lens Arm)		3	0
W.169	Screw, Thumb (Clamping Cine Lens)		3	0
W.170	Washer Key		3	0
W.171	Nut, Stud			8
W.172	Spring, Cine Lens Holder		1	3
W.173	Nut, Focussing (Cine Lens)		6	4
W.174	Sleeve, Focussing		7	3
W.175	Screw, Focussing		9	0
W.176	Screw, Stop		6	0
W.177	Latch, Cine Lens Holder		6	0
W.178	Screw, Latch Pivot		2	6
W.179	Bush, Cine Lens Adapter		9	0
W.180	Arm, Lens	1	12	6
W.181	Conduit, Flexible (12ins. long)		1	6
W.182	Holder, Lamp		5	6
W.183	Base, Lamp		12	0
W.184	Screw, Conduit Securing			4
W.185	Box, Junction		11	0
W.186	Screw, Junction Box Securing			6
W.187	Switch		2	6
W.188	Screw, Switch Securing			8

No.		EACH £	s.	d.
W.189	Bracket, Gate			6
W.190	Screw, Gate Bracket Securing		1	6
W.191	Window, Observation		2	3
W.192	Stop, Gate Plate			6
W.193	Screw, Gate Plate Stop Securing		12	0
W.194	Boss, Shutter			6
W.195	Screws, Boss Securing			3
W.196	Washers		2	3
W.197	Plate, Gate Catch			6
W.198	Screw, Plate Securing		5	6
W.199	Roller, Film Guide		1	0
W.200	Spindle, Film Guide Roller		2	3
W.201	Bracket, Lower Guide Roller		2	3
W.202	Bracket, Upper Guide Roller		6	0
W.203	Frame, Window		12	0
W.204	Shutter Drum (not complete unit)		2	0
W.205	Wings, Drum Shutter		1	3
W.206	Spindle, Drum Shutter Wing		1	0
W.207	Collar, Large			9
W.208	Collar, Small			6
W.209	Ring, Spring			6
W.210	Spring, Wing		9	0
W.211	Shield, Light			6
W.212	Screw, Light Shield Securing	1	12	0
W.213	Shield, Heat			6
W.214	Screws, Heat Shield Securing		6	8
W.215	Conduit, Flexible (9 feet)		3	3
W.216	Cable (9 feet 6 ins.)		5	0
W.217	Socket, Cable			8
W.218	Nut, Cable Socket			

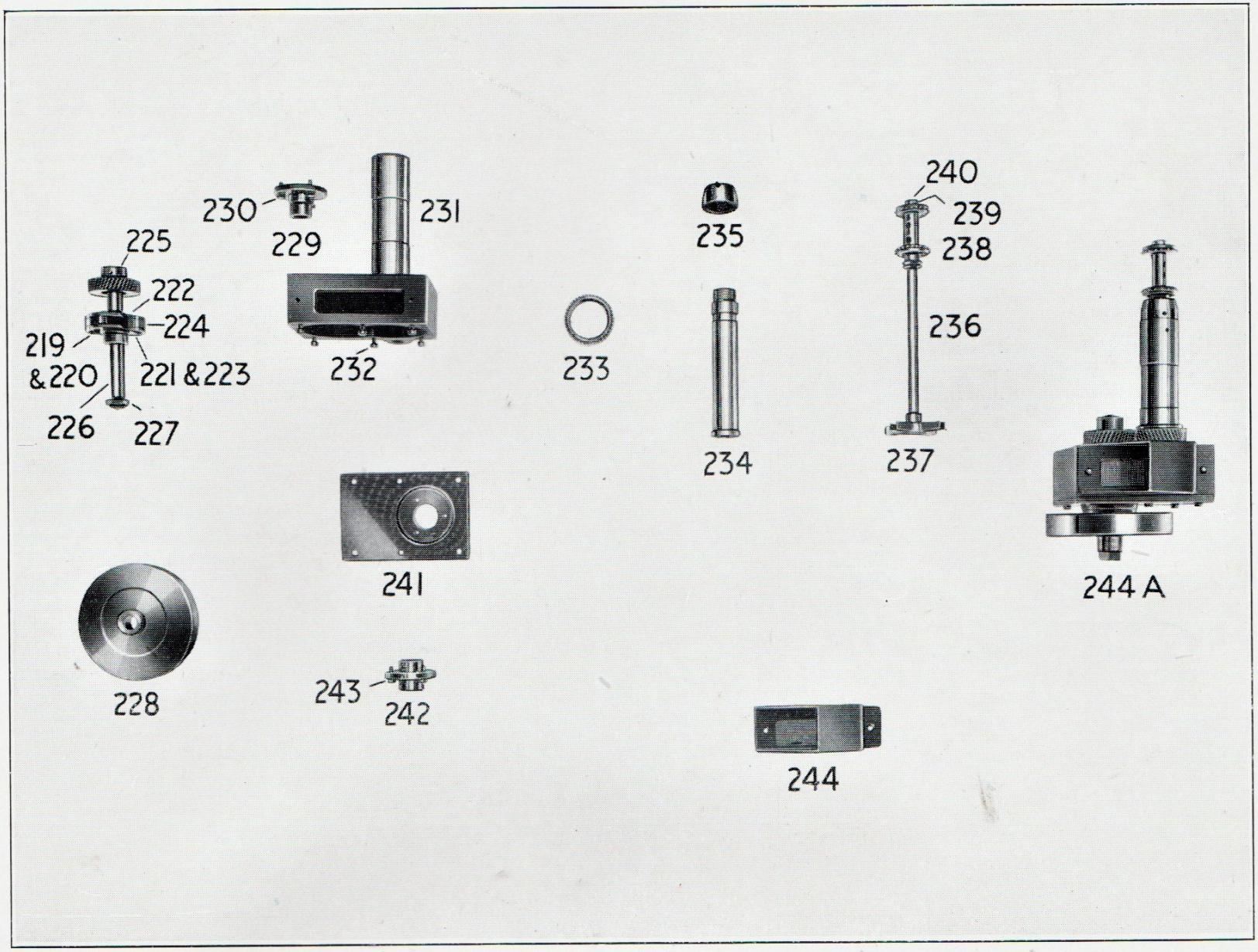
225
222
224
219
&220
221 &223
226
227
230
229
231
232
233
235
234
240
239
238
236
237
241
244 A
228
243
242
244

IMPORTANT:

Quote Mechanism Serial Number When Ordering Spare Parts.

PLATE 5.

No.			EACH £	s.	d.
W.219	Roller, Cam	Comprises Spindle and Cam Complete			
W.220	Pin, Cam Roller				
W.221	Plate, End (Tapped Holes)				
W.222	Plate, End (Clear Holes)		3	12	0
W.223	Screw, Plate Securing				
W.224	Cam, Only				
W.225	Gear, Cam Shaft				
W.226	Spindle, Cam				
W.227	Nut, Balance Wheel Securing			1	3
W.228	Balance Wheel		1	9	0
W.229	Bush, Cam Shaft Inner			18	0
W.230	Screws, Inner Bush Securing				8
W.231	Housing, Intermittent Unit				
W.232	Screws, Cover Securing				8
W.233	Gear, Inter. Idle		1	1	6
W.234	Bush, Eccentric		1	16	0
W.235	Nut, Eccentric Bush			10	9
W.236	Spindle, Inter. Sprocket		1	1	6
W.237	Cross, Maltese		2	0	0
W.238	Sprocket, Intermittent		1	9	0
W.239	Washer, Key			2	6
W.240	Screw, Key Washer Securing			1	3
W.241	Cover, Unit Body				
W.242	Bush, Cam Shaft Outer			18	0
W.243	Screw, Outer Bush Securing				8
W.244	Guide, Oil			12	0
W.244a	Unit, Intermittent Cpte.		25	4	0

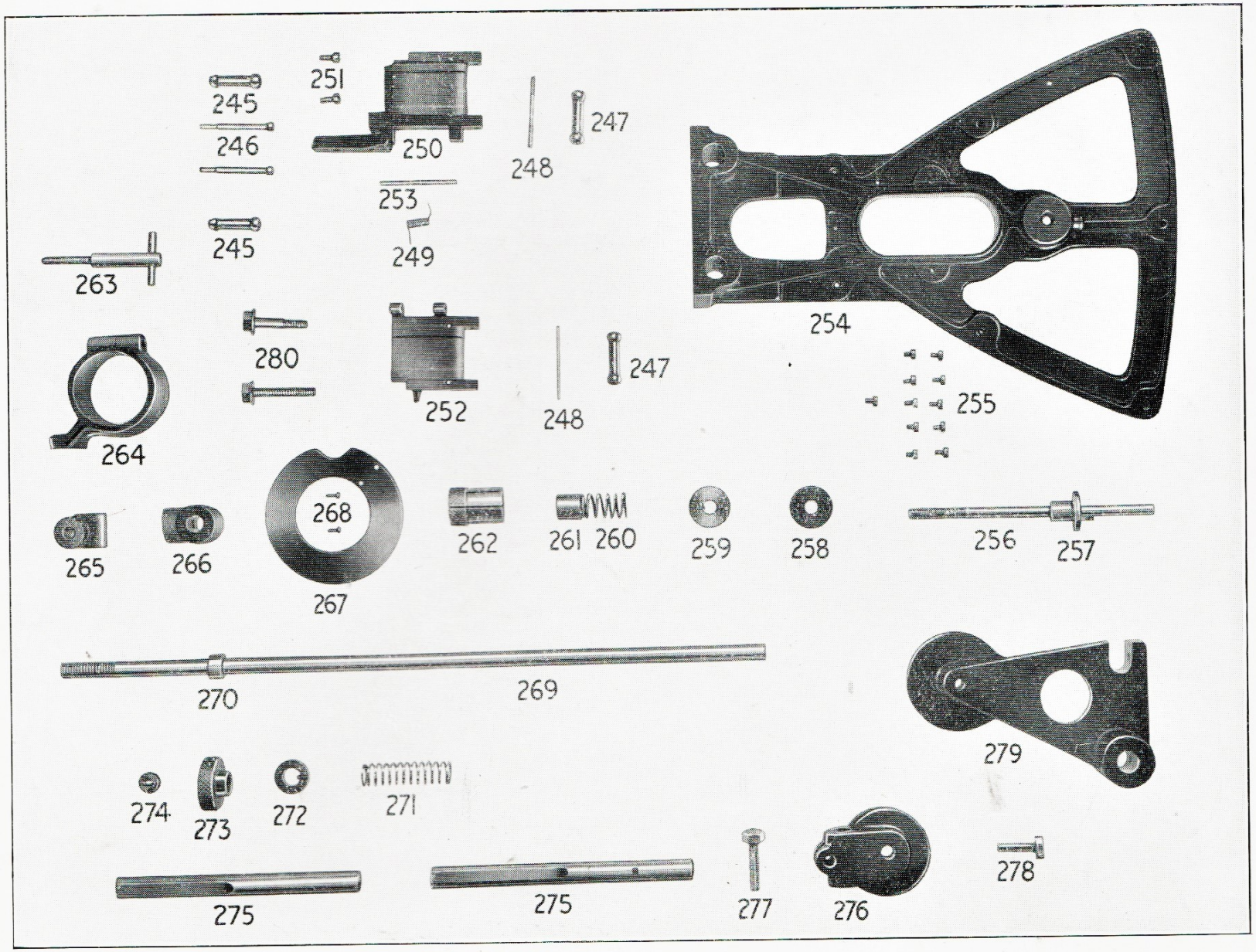
245
246
251
250
248
247
253
249
245
263
254
280
252
248
247
255
264
268
262
261
260
259
258
256
257
265
266
267
270
269
279
274
273
272
271
275
275
277
276
278

PLATE 6

IMPORTANT:

Quote Mechanism Serial Number When Ordering Spare Parts.

No.	PLATE 6	EACH £	s.	d.
W.245	Rollers, Inside		3	9
W.246	Spindle, Inside Roller		1	6
W.247	Rollers, Outside		3	9
W.248	Spindle, Outside Roller		1	0
W.249	Spring, Film Trap Lid			8
W.250	Body, Film Trap	1	1	6
W.251	Screws, Film Trap Securing			4
W.252	Lid, Film Trap		14	6
W.253	Pin, Film Trap Lid Hinge		1	0
W.254	Arm, Top Spool	2	2	0
W.255	Screws, Top Spool Box Securing			8
W.256	Spindle, Top Spool }		18	0
W.257	Collar, Friction }			
W.258	Washer, Friction		1	0
W.259	Washer, Key		3	9
W.260	Spring, Compression		1	0
W.261	Collar, Spring		1	9
W.262	Nut, Spring		7	9
W.263	Screw, Bracket Thumb		3	0
W.264	Holder, Title Lens		11	9
W.265	Boss, Swivel		4	6
W.266	Boss, Focussing		5	6
W.267	Shield, Title Lens Light		3	0
W.268	Screws, Heat Shield Securing			4
W.269	Rod, Title Lens }		8	6
W.270	Collar }			
W.271	Spring, Title Lens Rod		1	3
W.272	Washer, Key		3	0
W.273	Nut, Focus		3	0
W.274	Screw, Focus Nut Retaining			8
W.275	Bars, Title Lens (Spool Arm)		3	3
W.276	Boss		10	9
W.277	Screw, Pivot		1	3
W.278	Screw, Boss Securing		1	3
W.279	Bracket, Title Lens	1	0	6
W.280	Screw, Swivel Boss Securing		1	3

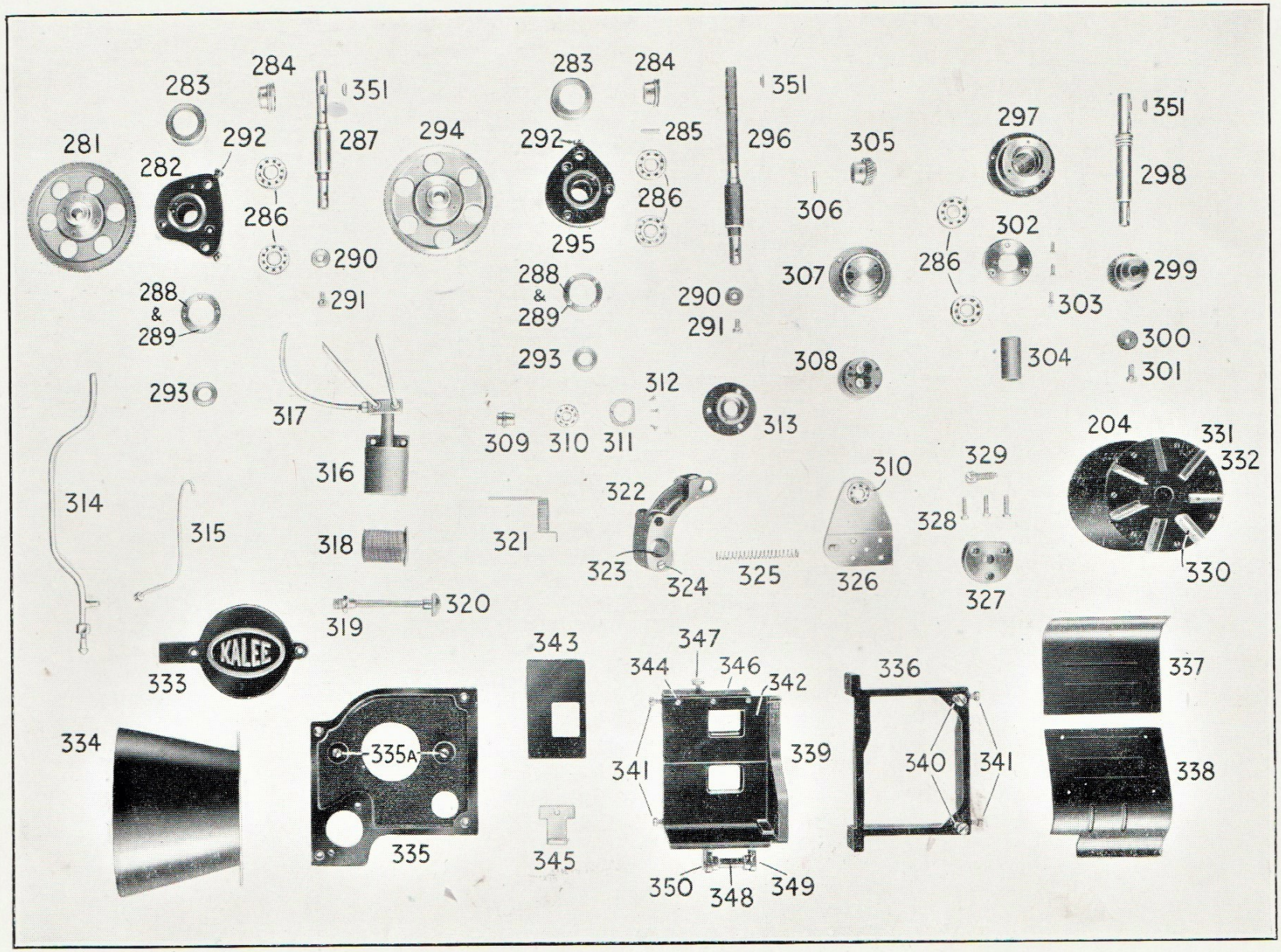
281
282
283
284
285
286
287
288 & 289
290
291
292
293
294
295
296
297
298
299
300
301
302
303
304
305
306
307
308
309
310
311
312
313
314
315
316
317
318
319
320
321
322
323
324
325
326
327
328
329
330
331
332
333
334
335
335A
336
337
338
339
340
341
342
343
344
345
346
347
348
349
350
351
204
KALEE

PLATE 7

IMPORTANT:
Quote Mechanism Serial Number When Ordering Spare Parts.

The following spare parts are applicable to Kalee Model Twelve Projector Mechanisms, including and later than Serial Number 16232.

PLATE 7.

No.		EACH £	s.	d.
W.281	Gear, Top Sprocket Spindle	1	16	0
W.282	Housing, Top Sprocket Spindle Bearing	2	2	0
W.283	Cover, Bearing		8	0
W.284	Oil Thrower, Sprocket Spindle		3	4
W.285	Pin, Oil Thrower Securing			6
W.286	Ball Race, Sprocket and Main Drive Spindles		4	0
W.287	Spindle, Top Sprocket		14	6
W.288	Ring, Bearing Retaining		4	0
W.289	Screws, Retaining Ring Securing			4
W.290	Washer, Gear Retaining		1	0
W.291	Screw, Gear Retaining			8
W.292	Screw, Stripper and Roller Bracket Securing		1	0
W.293	Ring, Bearing Guard		2	0
W.294	Gear, Lower Sprocket Spindle	1	16	0
W.295	Housing, Lower Sprocket Spindle Bearing	2	2	0
W.296	Spindle, Lower Sprocket	1	1	6
W.297	Housing, Main Drive Spindle	1	15	0
W.298	Spindle, Main Drive	1	1	6
W.299	Gear, Main Drive	1	1	6
W.300	Washer, Gear Securing		1	0
W.301	Screw, Gear Securing			8
W.302	Cap, Bearings Retaining		10	0
W.303	Screws, Cap Securing			6
W.304	Sleeve, Separation		2	0
W.305	Gear, Pump Drive		12	0
W.306	Pin, Gear Retaining			6
W.307	Boss, Oil Pump		9	0
W.308	Body Oil Pump		12	0
W.309	Oil Thrower, Shutter Spindle		2	9
W.310	Ball Race, Shutter Spindle		3	0
W.311	Ring, Ball Race Retaining		2	0
W.312	Screws, Ring Securing			4
W.313	Housing, Shutter Spindle Bearing		12	0
W.314	Pipe, Main Oil Supply		9	0
W.315	Pipe, Top Bearing Feed		5	0

No.		EACH £	s.	d.
W.316	Tank, Complete Oil	2	0	0
W.317	Pipe, Intermittent Feed		5	0
W.318	Oil Filter with Packing Washer		7	6
W.319	Pipe, Sight Feed		5	9
W.320	Boss, Sight Feed Pipe		4	0
W.321	Spring, Roller Bracket		1	0
W.322	Fork, Compensator	1	4	0
W.323	Tongue, Compensator Fork		4	0
W.324	Screw, Fork Securing			6
W325	Spring, Compensator Fork		1	0
W.326	Bracket, Shutter Spindle		12	0
W.327	Boss, Compound Spindle		8	0
W.328	Screws, Boss Securing			6
W.329	Screw, Spindle Securing		3	0
W.330	Fan, Drum Shutter		10	0
W.331	Screws, Fan Securing			6
W.332	Nut, Fan Securing			6
W.333	Plate, Baffle		6	0
W.334	Cone, Light		9	0
W.335	Side, Light Box		12	0
W.335a	Screws, Baffle Securing			6
W.336	Support, Light Box		15	0
W.337	Plate, Top Light Box		6	0
W.338	Plate, Lower Light Box		6	0
W.339	Bracket, Gate			
W.340	Screws, Main Heat Shield Securing			8
W.341	Screws, Light Box Side Securing			6
W.342	Heat Shield, Gate		4	0
W.343	Filler Shield		4	0
W.344	Screws, Shield Securing			6
W.345	Stripper, Intermittent Sprocket		4	0
W.346	Screw, Stripper Securing			8
W.347	Screw, Gate Plate Stop		1	0
W.348	Roller, Film Guide		5	6
W.349	Spindle, Roller		1	0
W.350	Screw, Spindle Securing			6
W.351	Key, Woodruff			8

BRANCHES.

BELFAST: 49 Donegall Street	Telephone **27065**
BIRMINGHAM: 57, John Bright Street	Telephone: **Midland 2351**
CARDIFF: 9 Park Lane	Telephone **7676**
DUBLIN: 34 Lower Abbey Street	Telephone **45059**
GLASGOW: 211 Hope Street	Telephone: **Douglas 1305**
LEEDS: 17 Wellington Street	Telephone **28259**
MANCHESTER : 5 The Parsonage	Telephone : **Blackfriars 1428-9**
NEWCASTLE-ON-TYNE : 2-10 Cross Street	Telephone **23038**