Spare Parts

GAUMONT-KALEE

UNIVERSAL ARC LAMP

Catalogue

Contents

See Note on page 32, re Alternative Carbon-Holder Arrangements.

Page one

GAUMONT-KALEE UNIVERSAL ARC LAMP

Carbon Drives

Each carbon is directly and continuously driven from its own feed screws, which are geared together and driven by a variable speed D.C. Motor. The motor speed is independently controlled by a rheostat mounted on the rear panel and the motor circuit includes a fuse and switch. The speed variation covers the full range of carbon combinations recommended by the manufacturers. By interchanging the gears coupling the feed screws, the lamp is quickly converted from H.I. to either L.I. or A.C.

Each positively-driven feed screw, constantly rotating, meshes with a worm wheel keyed to a shaft in the corresponding carbon carriage, and extended to a hand-knob outside the lamp. Each shaft is held against rotation by a dual friction clutch. While so held, the worm wheel is engaged as a nut by the rotating feed screw, which thus traverses the carbon. Turning the knob by hand overcomes the grip of the clutch and rotates the worm wheel which works into the lead screw like a rack, and provides a simple and sensitive hand feed, with rapid traverse for resetting. The lamp is also available for hand feed, in which case the motor and gear train are replaced by 1 : 1 ratio gears incorporating a control knob acting as a common feed. In addition carbon-adjusting knobs are situated at the side of the lamp as in all other models

Mirror Adjustment

The mirror is carried in a precision three-point mounting in which it is retained by a single spring-loaded catch. Sensitive micrometer levelling adjustments are provided, free from backlash, and operated by knobs on the rear panel. Mirror focus adjustment is obtained by sliding the complete mirror mounting along the guide bars. When this adjustment has been made the clamp screw should be secured. The mirror screen and dowser are linked together and can be operated from either side of the lamp. The mechanism is simple and robust without springs or complicated linkages, and provides a mirror screen which almost completely encircles the negative carbon, thus protecting the mirror when the arc is struck.

Carbon Grips and Guides

The carbon grips are of heat-resistant material of simple, effective screw-clamp type to accept any carbon size. Their insulated clamping knobs are placed out of the glare of the lamp and remain cool to handle. The positive carbon grip is fixed and is carefully set in position at the factory. The negative carbon grip is self-aligning to a carbon guide, which controls the carbon near the tip. The guide is adjustable both vertically and horizontally for accurate carbon alignment by micrometer control knobs on the rear panel. An inspection window in the rear panel permits visual checking of the alignment.

Arc Image

A periscope throws an enlarged image of the arc on to a screen on the operating side of the lamp, at the base of the chimney. The correct crater position is with the end of the positive carbon set at $4\frac{1}{4}$-in. from the back of the centre of the mirror, and the periscope is set to correspond with this when the mirror is in the mean focussing position. Further adjustment should not be necessary, but the position of the image on the screen can be controlled by turning and, if necessary, tilting the reflector which is carried by the periscope.

Electrical

All wiring is brought to a terminal panel in the rear of the lamp, accessible by removing the readily detachable cover plate. A detachable entry panel admits variations in conduit fittings. The rear panel, which carries the motor control rheostat, motor fuse and switch, with associated wiring, is readily detachable to give easy access to the wiring and also to the lamp mechanism. The fuses are of standard " Cartridge " type.

Page two

OPERATING AND MAINTENANCE

Installation

Remove the detachable cover beneath the rear panel thus exposing the terminal panel. Connect the arc leads to the specified terminals.

N.B.—All internal wiring runs from this panel and the motor leads are connected across the main arc feed points.

Set the motor potentiometer to correspond to the carbon feed, i.e. to maintain the position of the image of the positive carbon tip on the screen and adjust the negative crutch to maintain correct positive crater formation.

Level the mirror by means of the adjusting knobs on the rear panel to obtain an even screen and finally focus the mirror, by means of sliding the complete mirror assembly along the guide bars, to obtain optimum screen illumination.

N.B.—After focussing securely lock the mounting in position.

Lubrication

Oil sparingly and daily all bearings and guides. The carbon carriage clutches should be kept free from oil and periodical cleaning of the friction discs along with the metal plate is recommended.

Carbon Carriage Drive Clutches

Undue tightening of the drive clutches merely makes the hand feed movement unnecessarily heavy. The clutches should be sufficiently tight to ensure the carbon carriages being driven at whatever rake the lamp is operating and once these are set they should require very little further attention as the clutch only " slips " whilst the carriages are fed by hand.

Removing the Mirror

With the mirror dowser fully open release the spring-loaded catch at the top of the mirror support casting, lift the mirror from the bottom support posts and withdraw, taking care not to foul the negative carbon crutch or the periscope barrel. To facilitate removal the negative crutch should be at the top of its vertical movement as controlled by the knob on the rear panel.

Conversion

Unless specifically ordered otherwise, the lamp is always supplied suitable for burning any of the carbon manufacturer's recommended H.I. combinations.

For converting to A.C. carbon burning, the gear on the positive lead screw, together with the worm driving same, must be replaced. The terminal panel should also be replaced as the A.C. panel incorporates a terminal block for the motor connections. The magnet controlling the arc flame may also be discarded but it should be borne in mind that this may be left in position without any detrimental effect to the case of A.C. burning.

For converting the standard H.I. lamp for low intensity carbon burning, the gear on the positive lead screw together with the worm driving it has to be replaced in just the same manner as for the A.C. burning. In this instance the terminal panel does not require replacing, i.e., it is common to the H.I. arrangement.

In addition, the positive carbon jaw must be replaced, allowing for the extra large diameter carbon remaining in position on the optical centre.

The arc flame control magnet requires slight modification, namely reducing the number of complete coils on the magnet made by the negative carbon lead from 9 to 7.

Page three

Page four

KEY PLATE FOR COMPLETE ASSEMBLY
GAUMONT-KALEE "UNIVERSAL" D.C. HIGH INTENSITY ARC LAMP

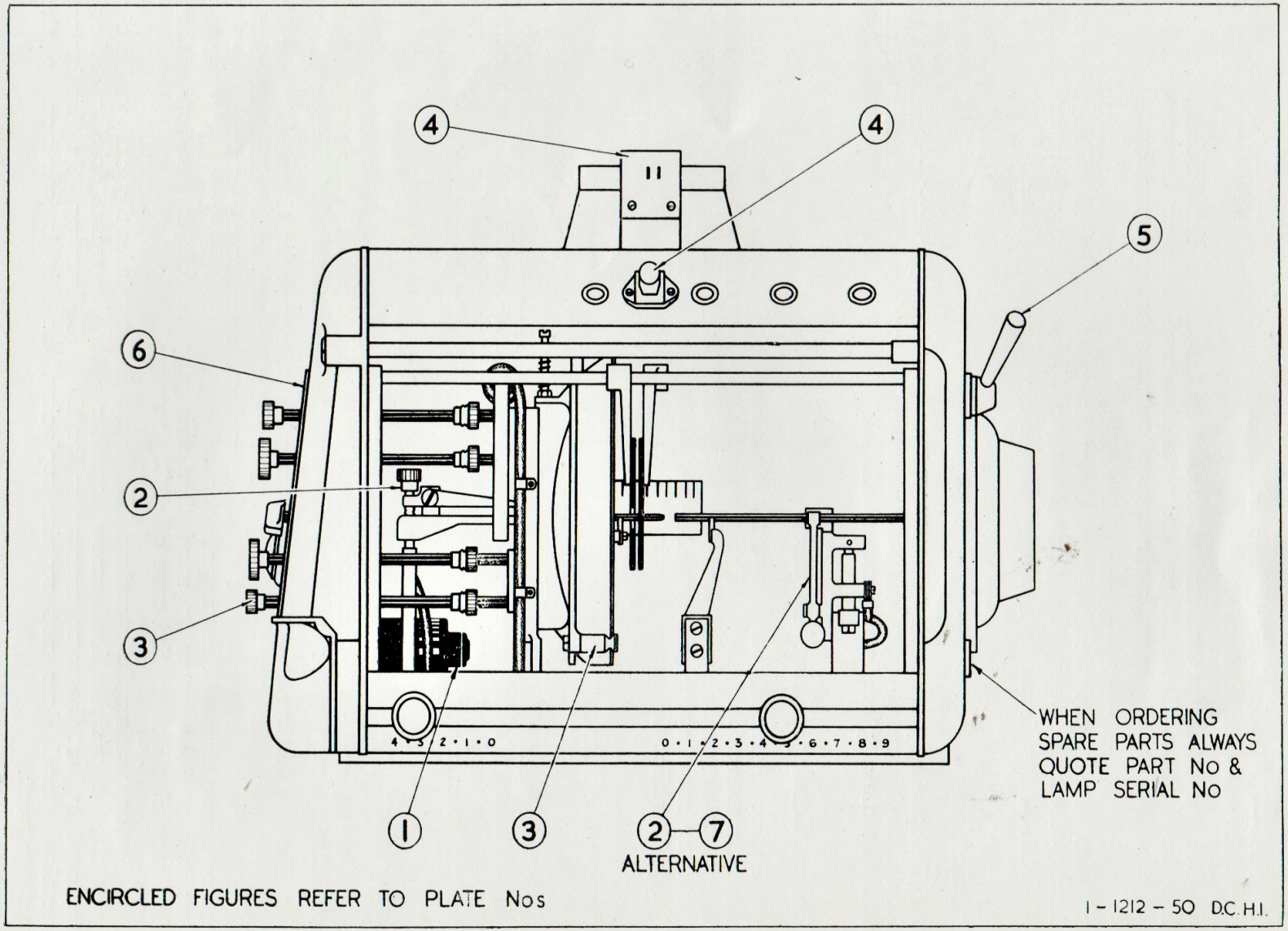

PLATE No. 12

THE GAUMONT-KALEE "UNIVERSAL" D.C. HIGH INTENSITY ARC LAMP

Page five

Page six

KEY PLATE FOR COMPLETE ASSEMBLY
GAUMONT-KALEE "UNIVERSAL" D.C. LOW INTENSITY ARC LAMP

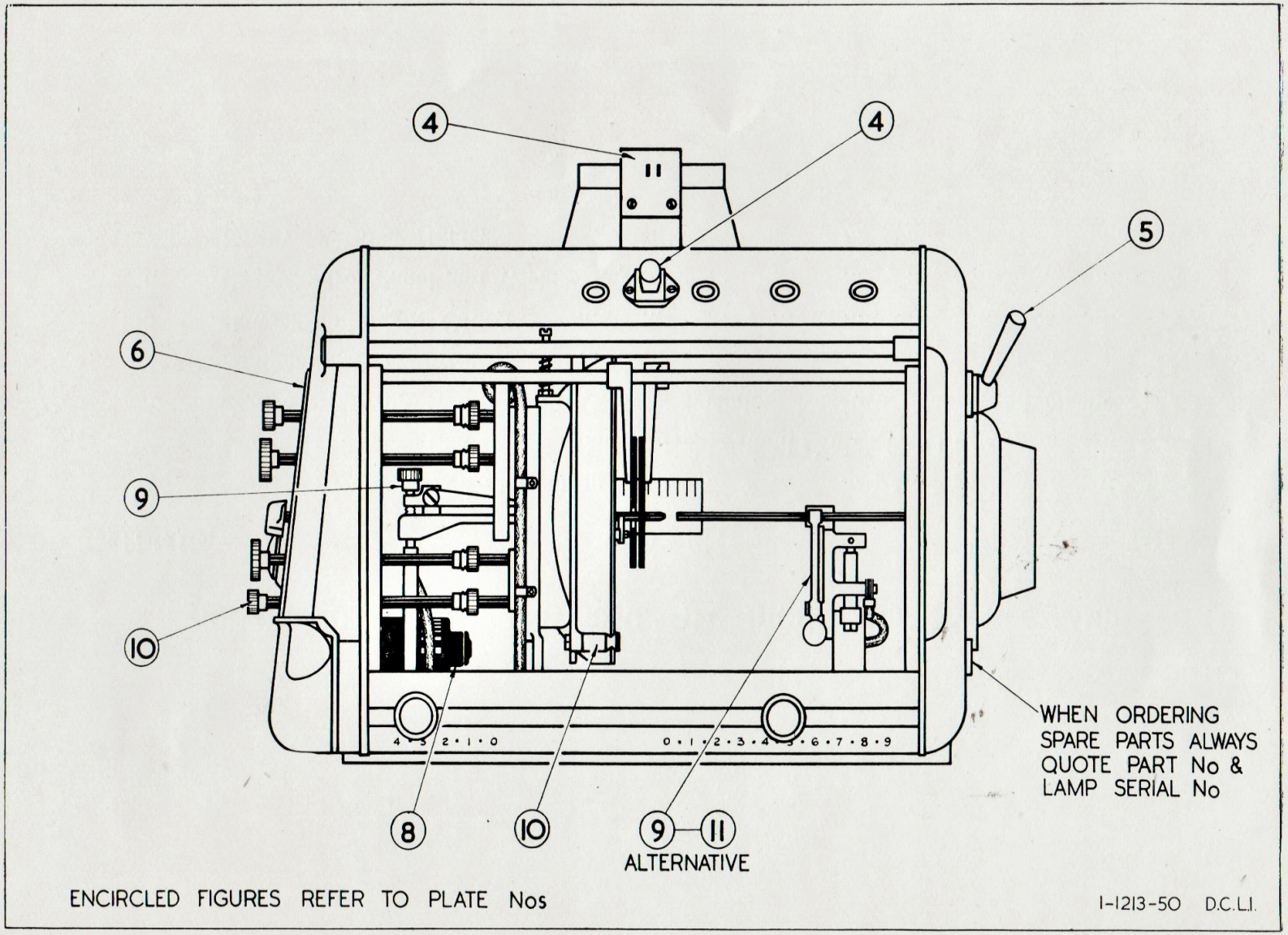

PLATE No. 13

THE GAUMONT-KALEE "UNIVERSAL" D.C. LOW INTENSITY ARC LAMP

Page seven

Page eight

KEY PLATE FOR COMPLETE ASSEMBLY GAUMONT-KALEE "UN VERSAL" A.C. ARC LAMP

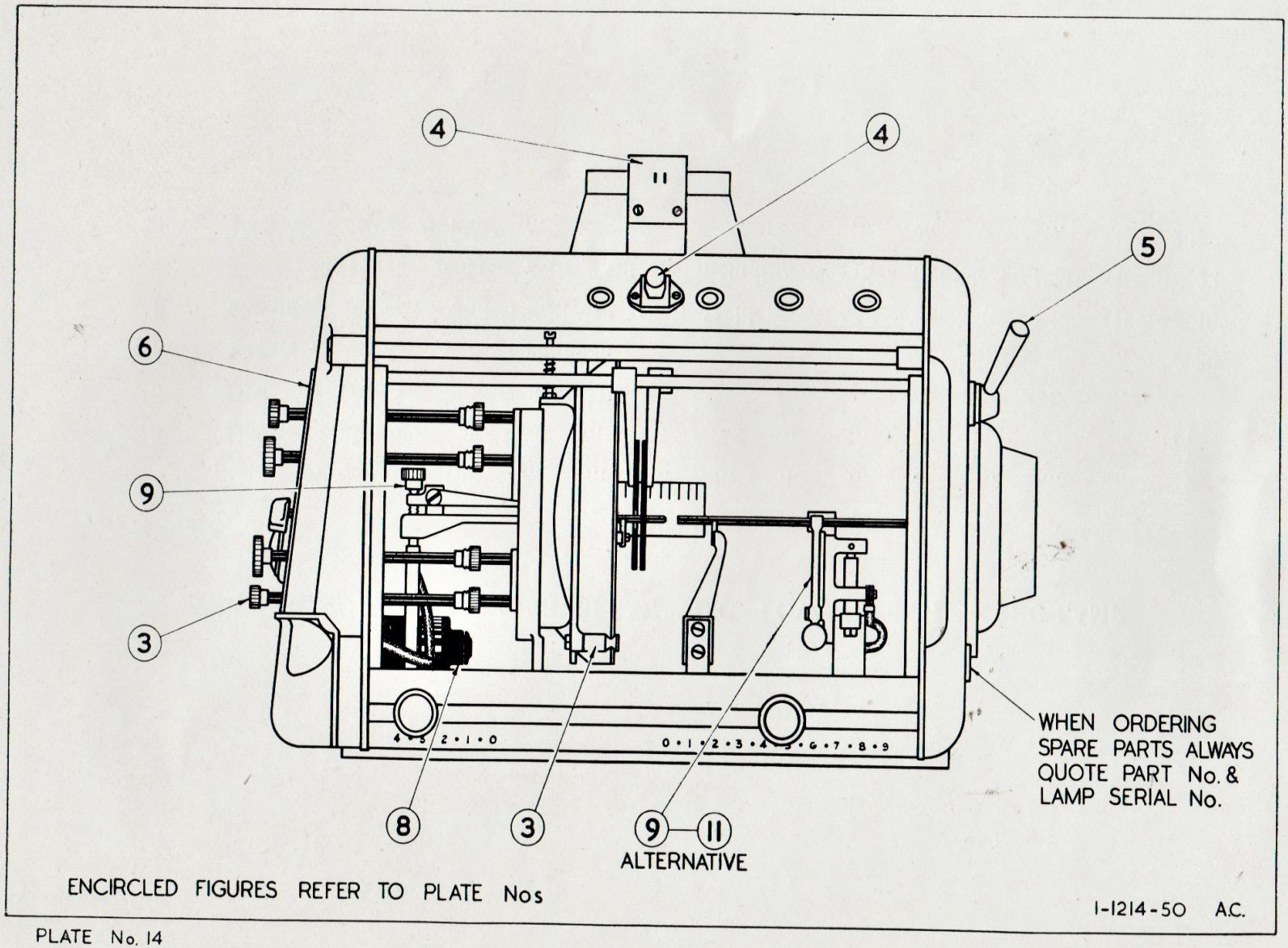

PLATE No. 14

THE GAUMONT-KALEE "UNIVERSAL" A.C. ARC LAMP

Page nine

Page ten

KEY PLATE FOR COMPLETE ASSEMBLY
GAUMONT-KALEE "UNIVERSAL" HAND-FEED LOW INTENSITY ARC LAMP

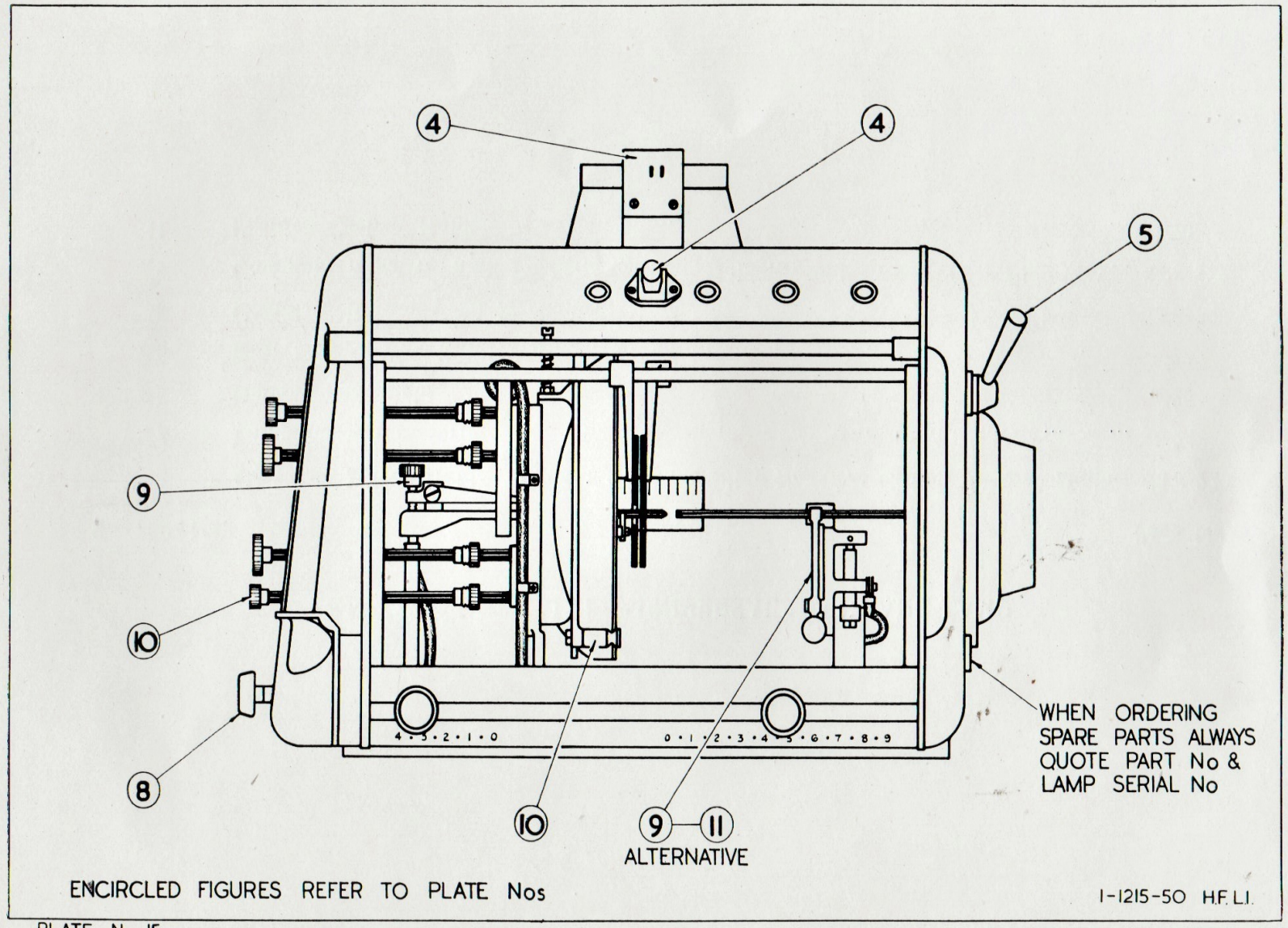

PLATE No. 15

THE GAUMONT-KALEE "UNIVERSAL" HAND-FEED LOW INTENSITY ARC LAMP

Page eleven

Page twelve

COMPLETE BURNER FEED MECHANISM

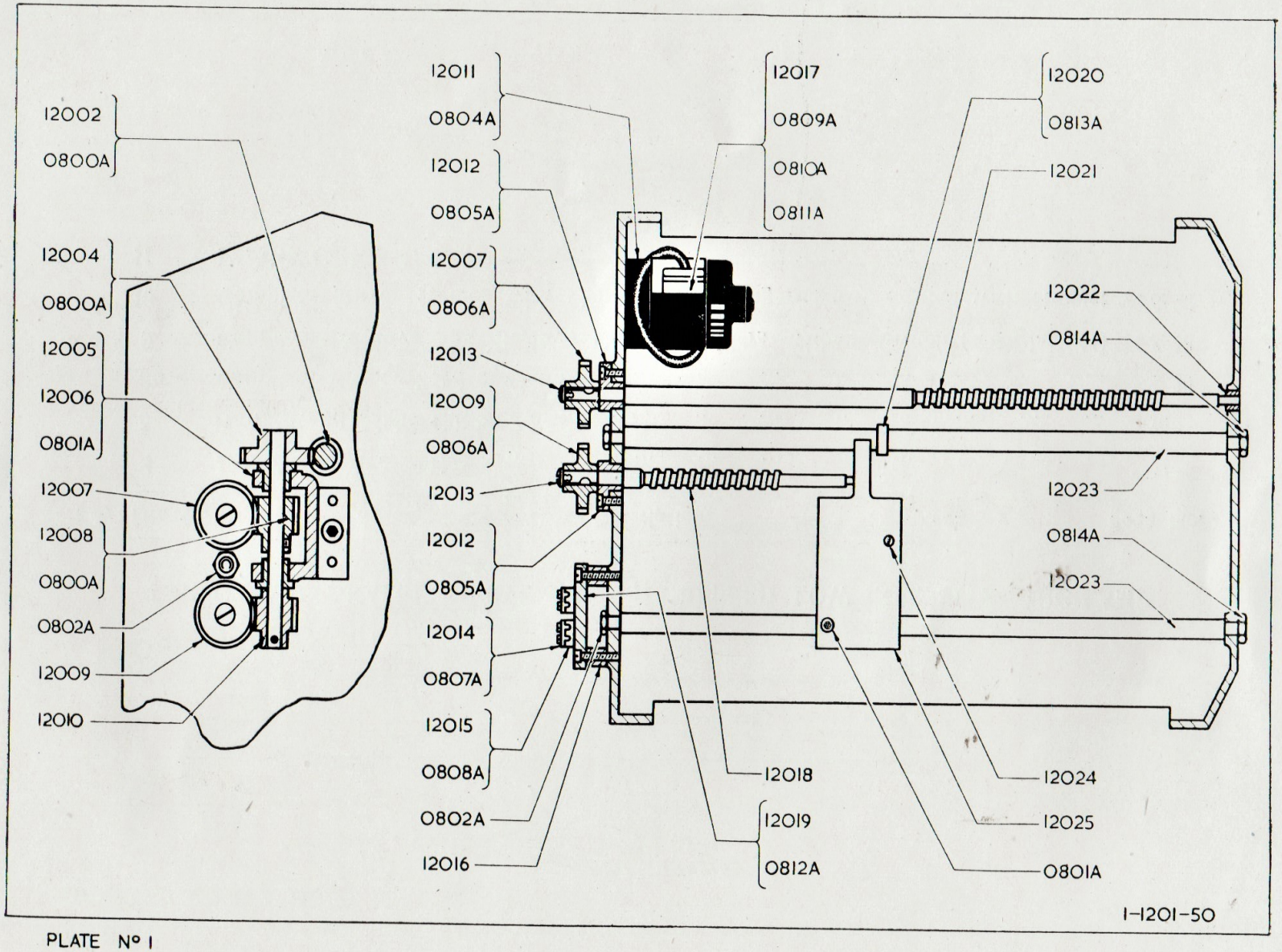

PLATE Nº 1

COMPLETE BURNER FEED MECHANISM

Part No.	Description.
12002	Worm, Motor
12004	Worm Wheel, Motor
12005	Bracket for Layshaft
12006	Dowel Securing 12005
12007	Worm Wheel, Positive
12008	Worm, Positive
12009	Worm Wheel, Negative
12010	Negative Worm and Layshaft
12011	Motor
12012	Bearing, Leadscrew
12013	Screw securing 12007, 12009
12014	Clamp, Terminal
12015	Block, Terminal
12016	Spacer, Panel, Terminal
12017	Block, Terminal, 3-way
12018	Leadscrew, Negative
12019	Panel, Terminal
12020	Collar, Stop
12021	Leadscrew, Positive
12022	Bush, Leadscrew, Positive
12023	Bar, Guide
12024	Screw, Locating
12025	Bridge, Support, Mirror

Part No.	Description.
	WASHERS, PINS & SCREWS
0800A	Screw Securing 12002, 12004, 12008
0801A	Screw Securing 12005 & Stop Screw Mirror Focus
0802A	Lock Nut Securing 12023
0804A	Screw Securing 12011
0805A	Screw Securing 12012
0806A	No. 1 WOODRUFF KEY for 12007, 12009
0807A	Screw Securing 12014
0808A	Screw Securing 12015
0809A	Screw Securing 12017
0810A	Nut Securing 12017
0811A	Washer for 12017
0812A	Screw Securing 12019
0813A	Screw Securing 12020
0814A	Lock Nut Securing 12023

Page thirteen

Page fourteen

COMPLETE NEGATIVE & POSITIVE CARBON HOLDERS & CRUTCH

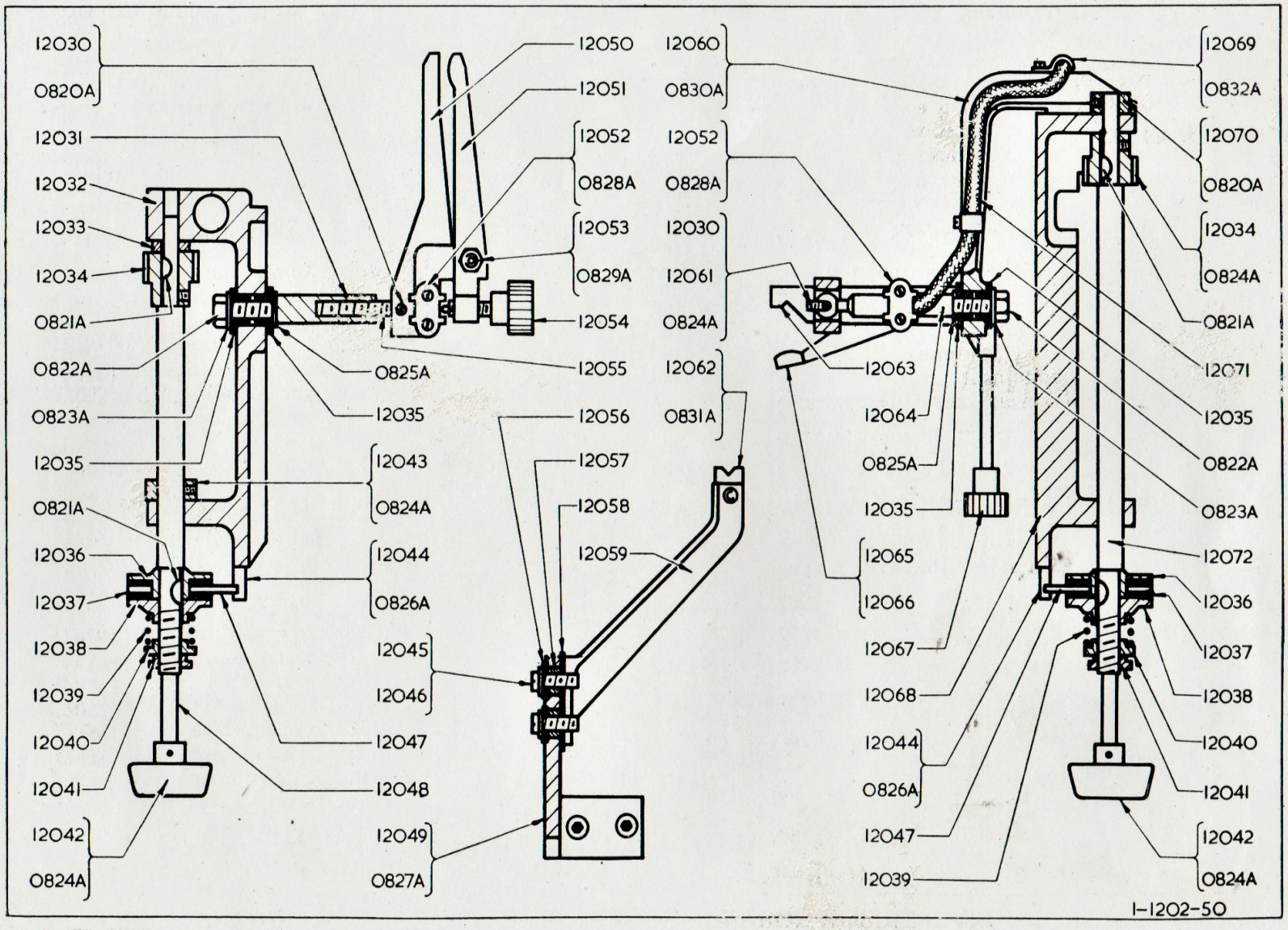

PLATE Nº 2

COMPLETE NEGATIVE AND POSITIVE CARBON HOLDERS AND CRUTCH

Part No.	Description.
	POSITIVE.
12030	Pin, Fulcrum
12034	Gear, Shaft, Feed
12035	Bush, Insulating
12036	Disc, Friction
12037	Pad, Friction
12038	Collar, Friction
12039	Spring, Friction
12040	Nut, Friction
12041	Nut, Locking
12042	Knob, Moulded
12044	Key for Friction Plate
12047	Plate, Friction
12052	Clamp, Terminal
12060	Arm, Holder, Carbon
12061	Screw, Adjusting, Carbon Holder
12063	Holder, Carbon
12064	Post, Carbon
12065	Clamp, Carbon
12066	Screw, Fulcrum
12067	Screw, Clamping
12068	Carriage, Carbon
12069	Clip for Cable
12070	Collar, Shaft, Feed
12071	Lead
12072	Shaft, Feed
	NEGATIVE.
12030	Pin, Fulcrum
12031	Post, Carbon
12032	Carriage, Carbon
12033	Washer, Shaft, Feed
12034	Gear, Shaft, Feed
12035	Bush, Insulating
12036	Disc, Friction
12037	Pad, Friction
12038	Collar, Friction
12039	Spring, Friction
12040	Nut, Friction
12041	Nut, Locking
12042	Knob, Moulded
12043	Collar, Shaft, Feed
12044	Key for Friction Plate
12047	Plate, Friction
12048	Shaft, Feed
12050	Holder, Carbon
12051	Clamp, Carbon
12052	Clamp, Terminal
12053	Screw, Fulcrum
12054	Screw, Clamping, for Carbon
12055	Screw, Adjusting
	POSITIVE CRUTCH
12045	Screw, Clamp, Crutch
12046	Washer, Crutch Arm
12049	Bracket, Crutch
12056	Washer, Insulation
12057	Bush, Insulation
12058	Insulation, Crutch
12059	Arm, Crutch
12062	Crutch
	WASHERS, PINS & SCREWS
0820A	Screw Securing 12030, 12070
0821A	No. 1 Woodruff Key for 12034, 12036
0822A	Nut Securing 12031, 12064
0823A	Washer for 12031, 12064
0824A	Screw Securing 12030, 12034, 12042, 12043
0825A	Washer for 12031, 12064
0826A	Screw Securing 12044
0827A	Screw Securing 12049
0828A	Screw Securing 12052
0829A	Lock Nut for 12053
0830A	Screw Securing 12060
0831A	Screw Securing 12062
0832A	Screw Securing 12069

Page fifteen

Page sixteen

POSITIVE CARBON HOLDER FOR ARC LAMPS

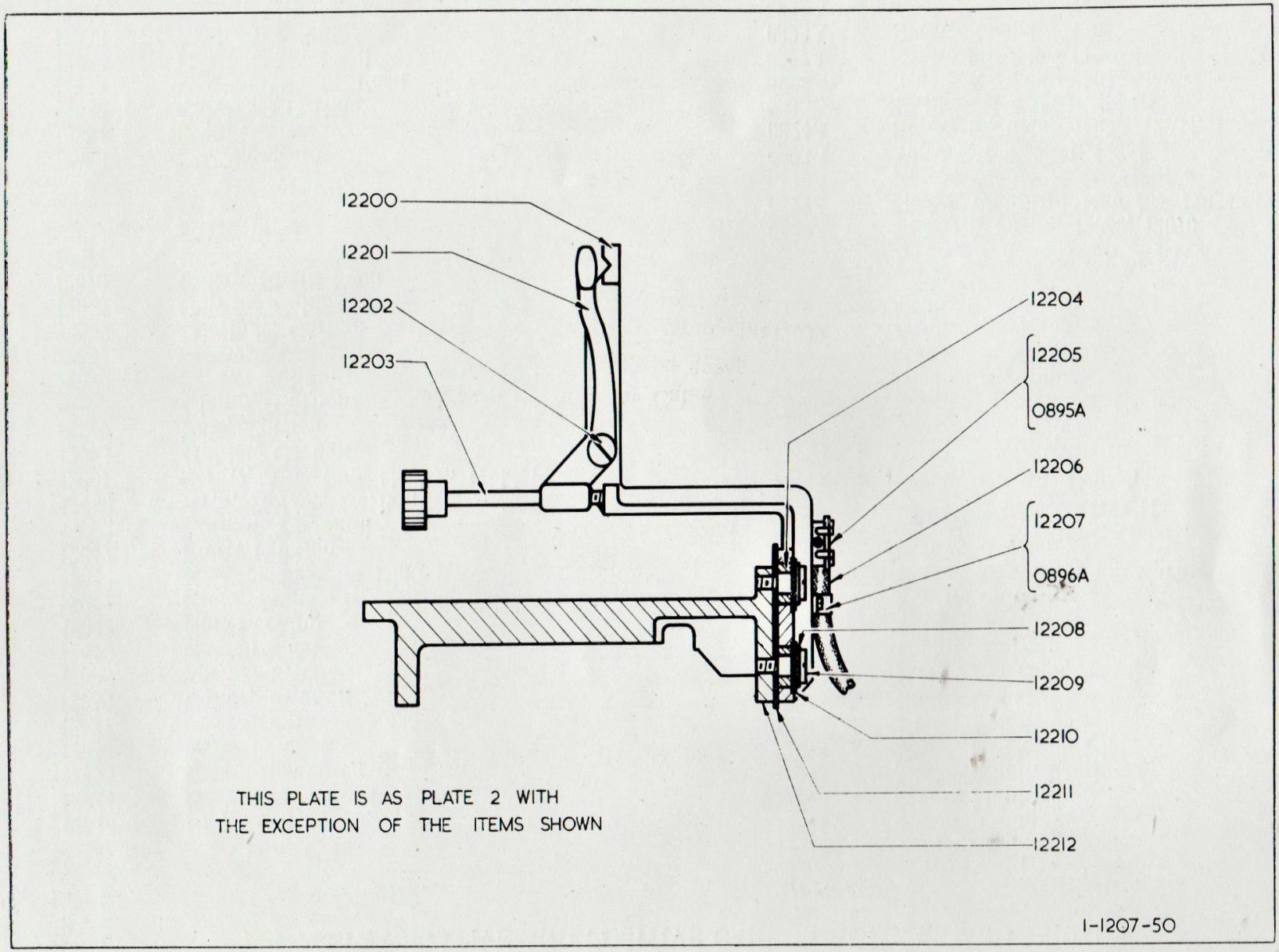

PLATE No. 7

POSITIVE CARBON HOLDER FOR ARC LAMPS

Part No.	Description.
12200	Holder, Carbon
12201	Clamp, Carbon
12202	Screw, Fulcrum
12203	Screw, Clamping
12204	Bush, Insulating
12205	Clamp, Terminal
12206	Lead
12207	Clip for Cable
12208	Washer for 12200
12209	Screw, Clamp, Insulation
12210	Washer, Insulating
12211	Insulation for Carriage
12212	Carriage, Carbon

WASHERS, PINS & SCREWS

0895A	Screw Securing 12205
0896A	Screw Securing 12207

Page seventeen

Page eighteen

COMPLETE NEGATIVE & POSITIVE CARBON HOLDERS & CRUTCH

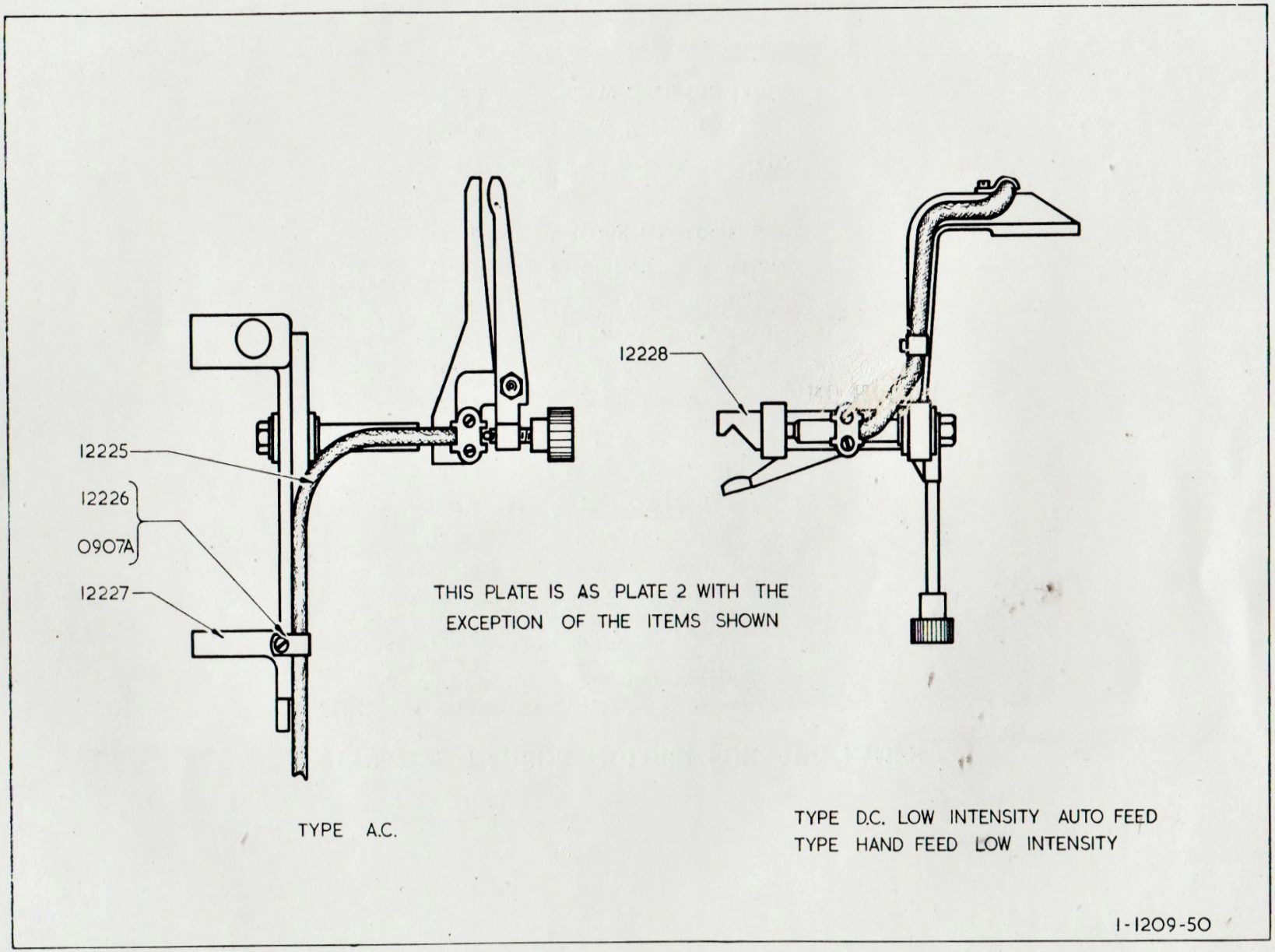

PLATE No.9

COMPLETE NEGATIVE AND POSITIVE CARBON HOLDERS AND CRUTCH

Part No.	Description.
12225	Lead, Arc
12226	Clip for Cable
12227	Carriage, Carbon

TYPE D.C. LOW INTENSITY (AUTO FEED) AND HAND FEED LOW INTENSITY

12228	Holder, Carbon, Positive

WASHERS, PINS AND SCREWS

0907A	Screw Securing 12226

Page nineteen

COMPLETE MIRROR HOLDER WITH CONTROLS INCLUDING NEGATIVE CRUTCH

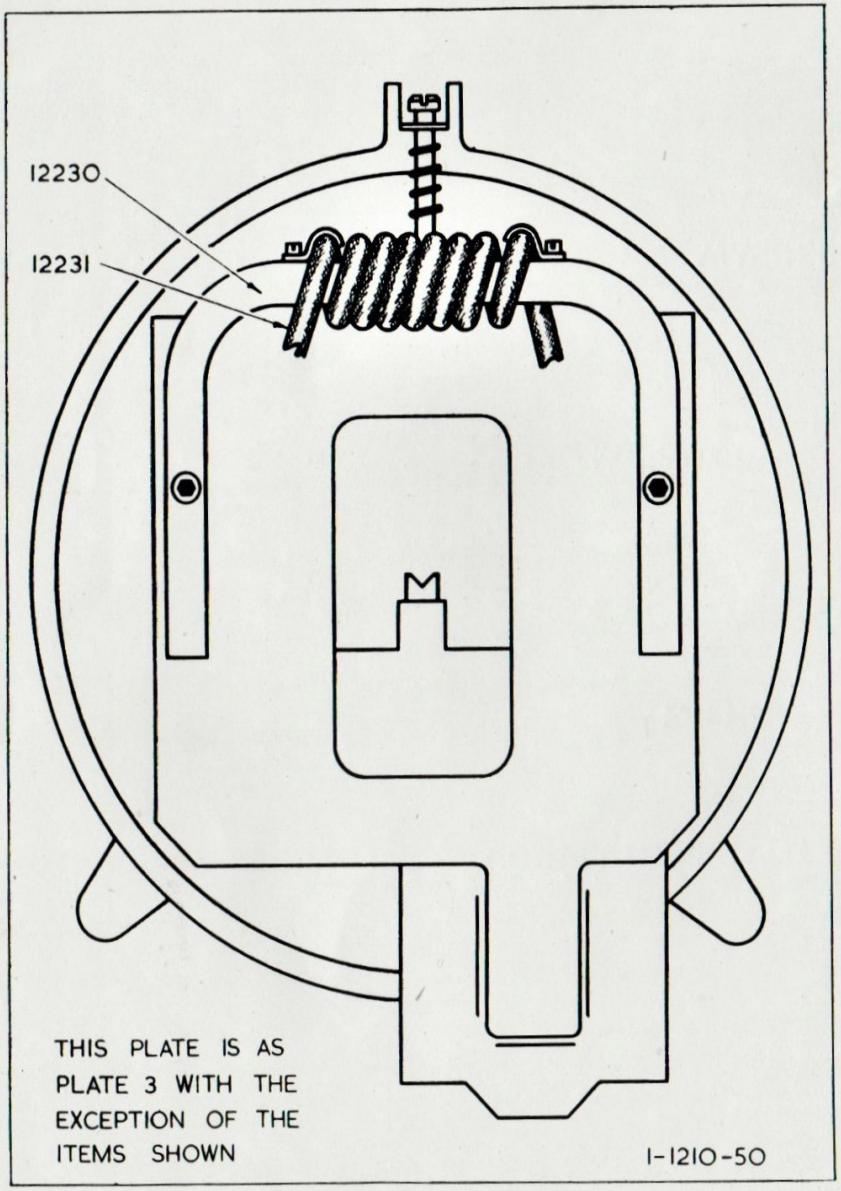

PLATE No. 10

POSITIVE CARBON HOLDER FOR ARC LAMPS

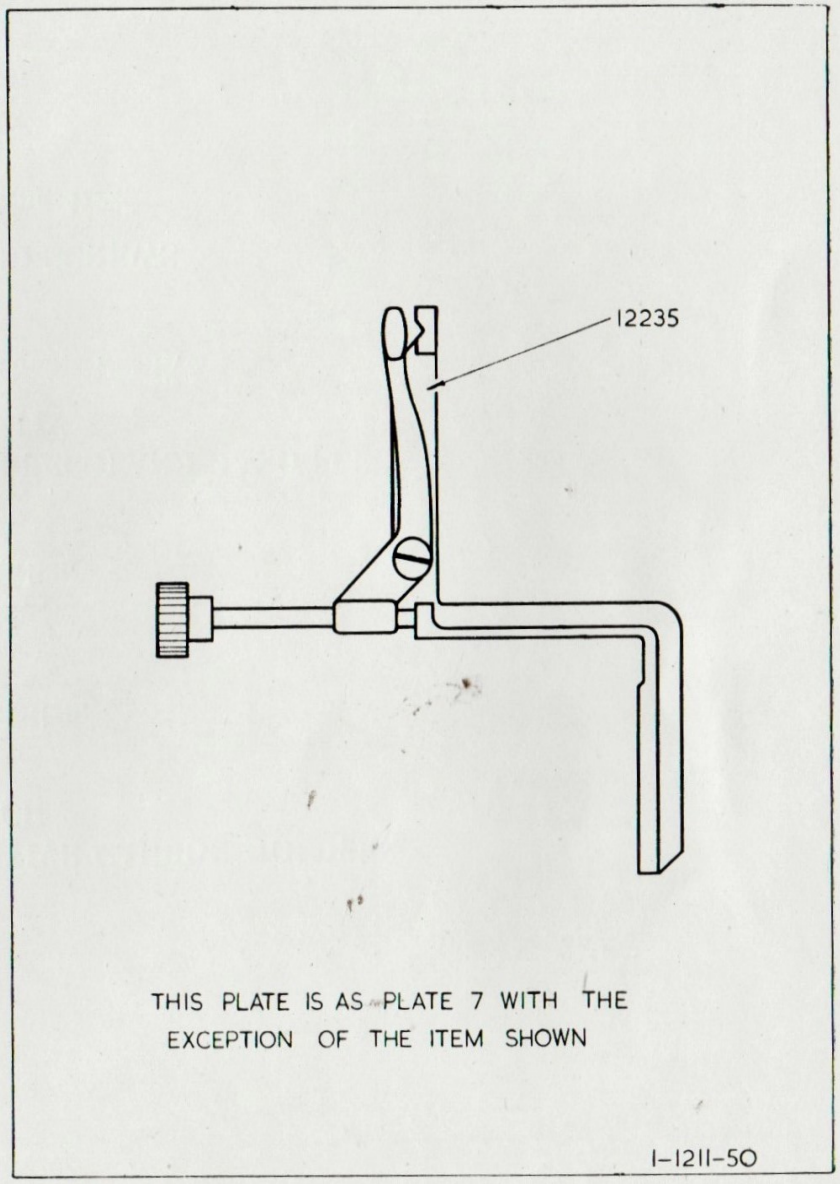

PLATE No. 11

Page twenty

COMPLETE MIRROR HOLDER WITH CONTROLS INCLUDING NEGATIVE CRUTCH

TYPES D.C. LOW INTENSITY (AUTO FEED) AND HAND FEED LOW INTENSITY.

Part No.	Description.
12230	Magnet
12231	Lead, Arc, Negative

POSITIVE CARBON HOLDER FOR ARC LAMPS

TYPES D.C. LOW INTENSITY AND HAND FEED LOW INTENSITY

Part No.	Description.
12235	Holder, Carbon, Positive

Page twenty-one

Page twenty-two

COMPLETE MIRROR HOLDER WITH CONTROLS, INCLUDING NEGATIVE CRUTCH

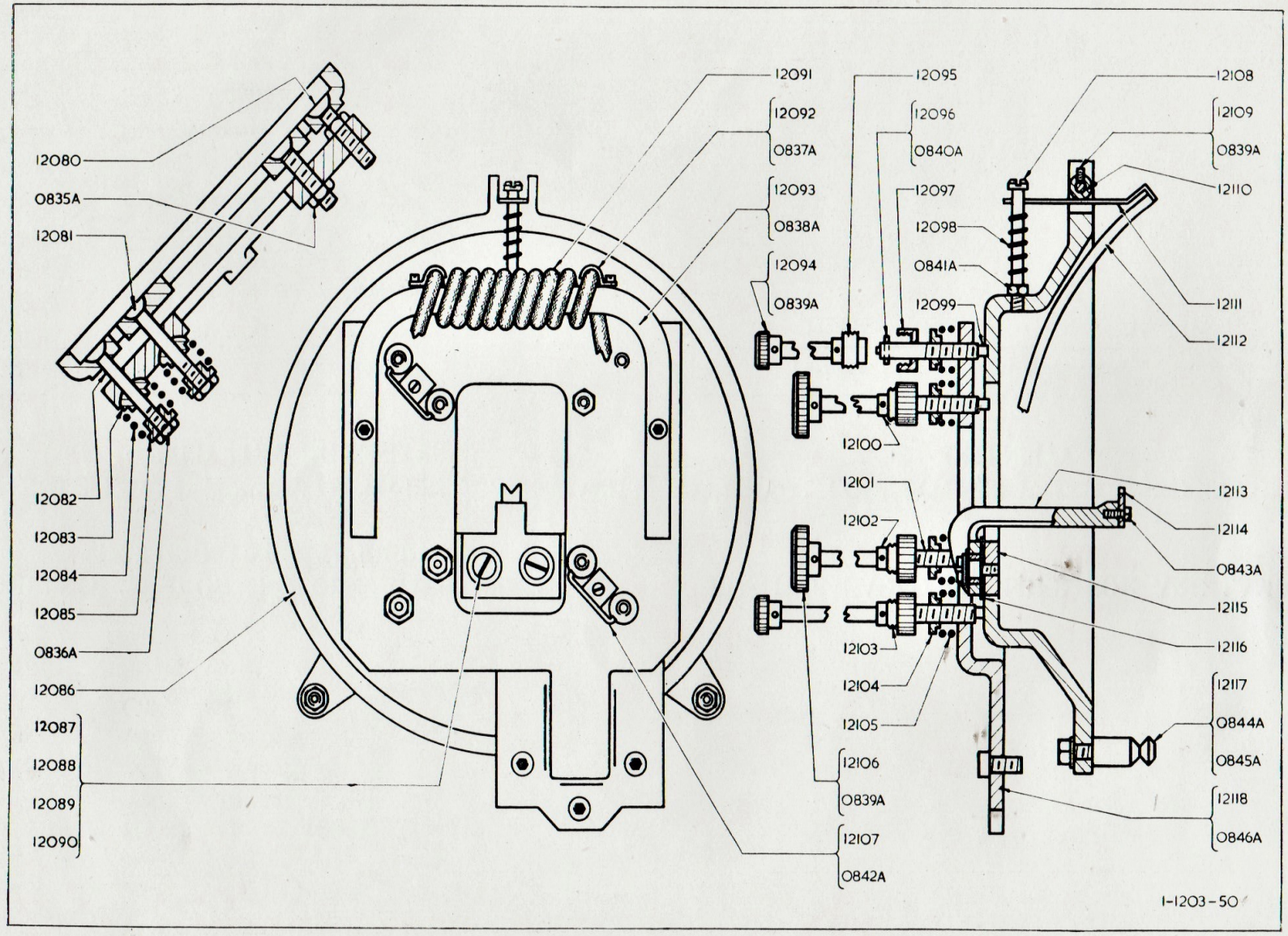

PLATE No.3

COMPLETE MIRROR HOLDER WITH CONTROLS, INCLUDING NEGATIVE CRUTCH

Part No.	Description.
12080	Bolt, Adjusting
12081	Bolt, Negative Pivot
12082	Bolt, Mirror Pivot
12083	Collar, Pivot
12084	Spring, Pivot
12085	Nut, Retaining Spring
12086	Holder for Mirror
12087	Screw, Clamp, Insulation
12088	Washer, Special
12089	Washer, Insulating
12090	Bush, Insulating
12091	Lead, Negative
12092	Clip for Cable
12093	Magnet
12094	Knob, Mirror Control
12095	Rod, Mirror Tilt Control (Horizontal)
12096	Pin, Universal Joint
12097	Nut, Universal Joint
12098	Spring, Catch, Mirror
12099	Screw, Adjusting (Long)
12100	Rod, Negative Crutch Control (Horizontal)
12101	Screw, Adjusting (Short)
12102	Rod, Negative Crutch Control (Vertical)
12103	Rod, Mirror Tilt Control (Vertical)
12104	Nut, Adjusting
12105	Spring, Adjusting
12106	Knob, Negative Crutch Control

Part No.	Description.
12107	Key for Nut
12108	Pillar for Mirror Spring
12109	Pin, Fulcrum
12110	Spacer for Mirror Catch
12111	Catch for Mirror
12112	Mirror, 12-in. diameter
12113	Arm, Negative Crutch
12114	Crutch, Negative
12115	Plate, Negative Crutch
12116	Insulation, Negative Crutch Arm
12117	Post for Mirror
12118	Support for Mirror

WASHERS, PINS AND SCREWS

0835A	Nut Securing 12080
0836A	Locknut for 12084
0837A	Screw Securing 12092
0838A	Screw Securing 12093
0839A	Screw Securing 12094, 12106, 12109
0840A	Screw Securing 12096
0841A	Lock Nut Securing 12108
0842A	Screw Securing 12107
0843A	Screw Securing 12114
0844A	Nut Securing 12117
0845A	Washer for 12117
0846A	Screw Securing 12118

Page twenty-three

Page twenty-four

LAMPHOUSE ACCESSORIES

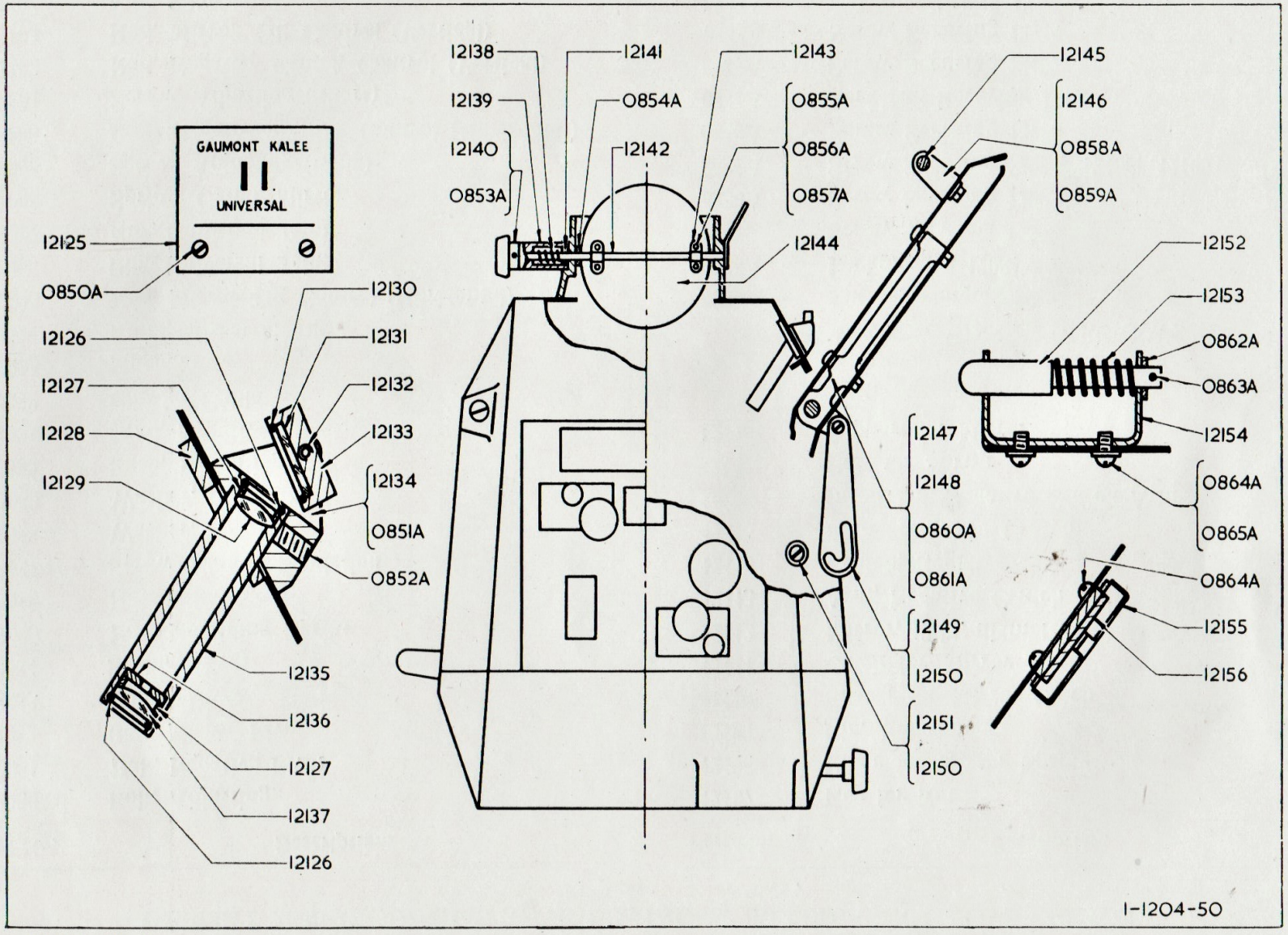

PLATE No. 4

LAMPHOUSE ACCESSORIES

Part No.	Description.
12125	Screen for Arc Image
12126	Spring Ring for Barrel
12127	Washer, Periscope
12128	Plate, Back
12129	Lens, Outer
12130	Spring Ring Retaining Mirror
12131	Mirror, Periscope
12132	Bolt Securing 12133
12133	Holder, Mirror, Periscope
12134	Mounting for Periscope
12135	Barrel, Periscope
12136	Washer, Stop
12137	Lens, Inner
12138	Spring for Chimney Damper Spindle
12139	Housing for Spring, Chimney Damper Spindle
12140	Knob for Chimney Damper Spindle
12141	Washer for Chimney Damper Spindle
12142	Spindle for Butterfly Disc
12143	Clip for Chimney Damper
12144	Disc, Butterfly
12145	Bar, Door Handle
12146	Post, Door Handle
12147	Hinge, Door
12148	Screw Securing 12147
12149	Stay for Door Support
12150	Stud Securing 12149, 12151
12151	Post for Door Support

Part No.	Description.
12152	Spindle for Door Catch
12153	Spring for Door Catch
12154	Bracket for Door Catch
12155	Frame for Window
12156	Window for Door

WASHERS, PINS AND SCREWS

0850A	Screw Securing 12125
0851A	Screw Securing 12134
0852A	Screw Securing 12135
0853A	Screw Securing 12140
0854A	Washer for 12142
0855A	Bolt Securing 12143
0856A	Nut Securing 12143
0857A	Washer for 12143
0858A	Nut Securing 12146
0859A	Washer for 12146
0860A	Nut Securing 12147
0861A	Washer for 12147
0862A	Washer for 12152
0863A	Split Pin Securing 12152
0864A	Screw Securing 12154, 12155
0865A	Washer for 12154

Page twenty-five

Page twenty-six

DOWSER AND LIGHT CUT-OFF

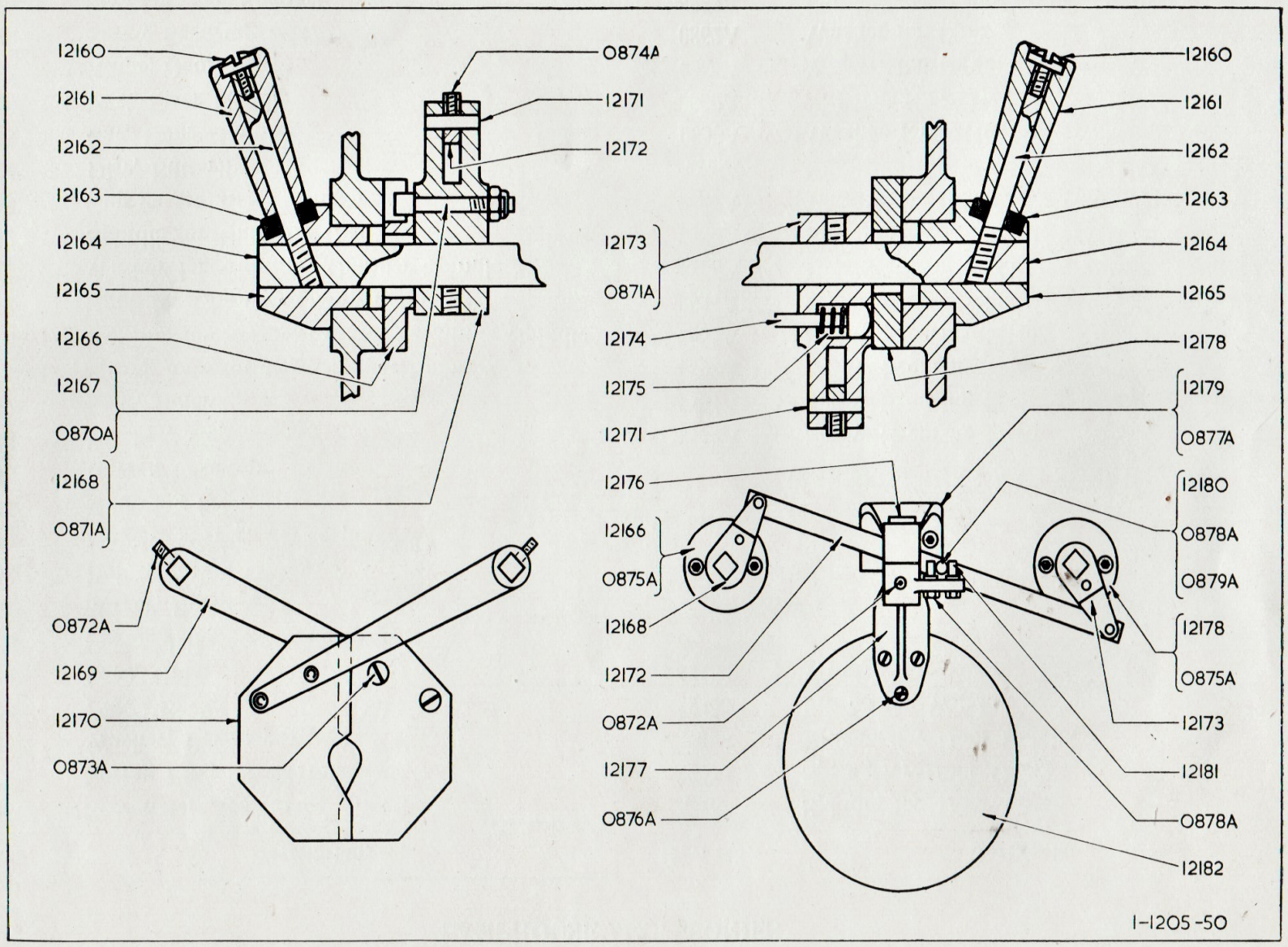

PLATE Nº 5

DOWSER AND LIGHT CUT-OFF

Part No.	Description.
12160	Screw Securing 12161
12161	Handle for Dowser
12162	Post for Dowser Handle
12163	Collar for Dowser Handle
12164	Shaft, Operating, Dowser
12165	Boss for Dowser Handle
12166	Disc, Stop, Dowser
12167	Pin, Stop, Dowser
12168	Arm, Link (Non-operating side)
12169	Arm for Mirror Shield
12170	Shield for Mirror
12171	Pin, Link
12172	Link for Coupling
12173	Arm, Link (Operating side)
12174	Pin, Locating
12175	Spring for Pin, Locating
12176	Pin, Swivel
12177	Arm for Dowser
12178	Disc, Locating

Part No.	Description.
12179	Bracket for Dowser
12180	Pin, Actuating
12181	Pin, Locating
12182	Saucer

WASHERS, PINS AND SCREWS

0870A	Nut Securing 12167
0871A	Screw Securing 12168, 12173
0872A	Screw Securing 12169, 12176
0873A	Screw Securing 12170
0874A	Screw Securing 12171
0875A	Screw Securing 12166, 12178
0876A	Screw Securing 12177
0877A	Screw Securing 12179
0878A	Nut Securing 12180, 12181
0879A	Washer for 12180

Page twenty-seven

Page twenty-eight

REAR CONTROL PANEL AND WIRING DIAGRAM

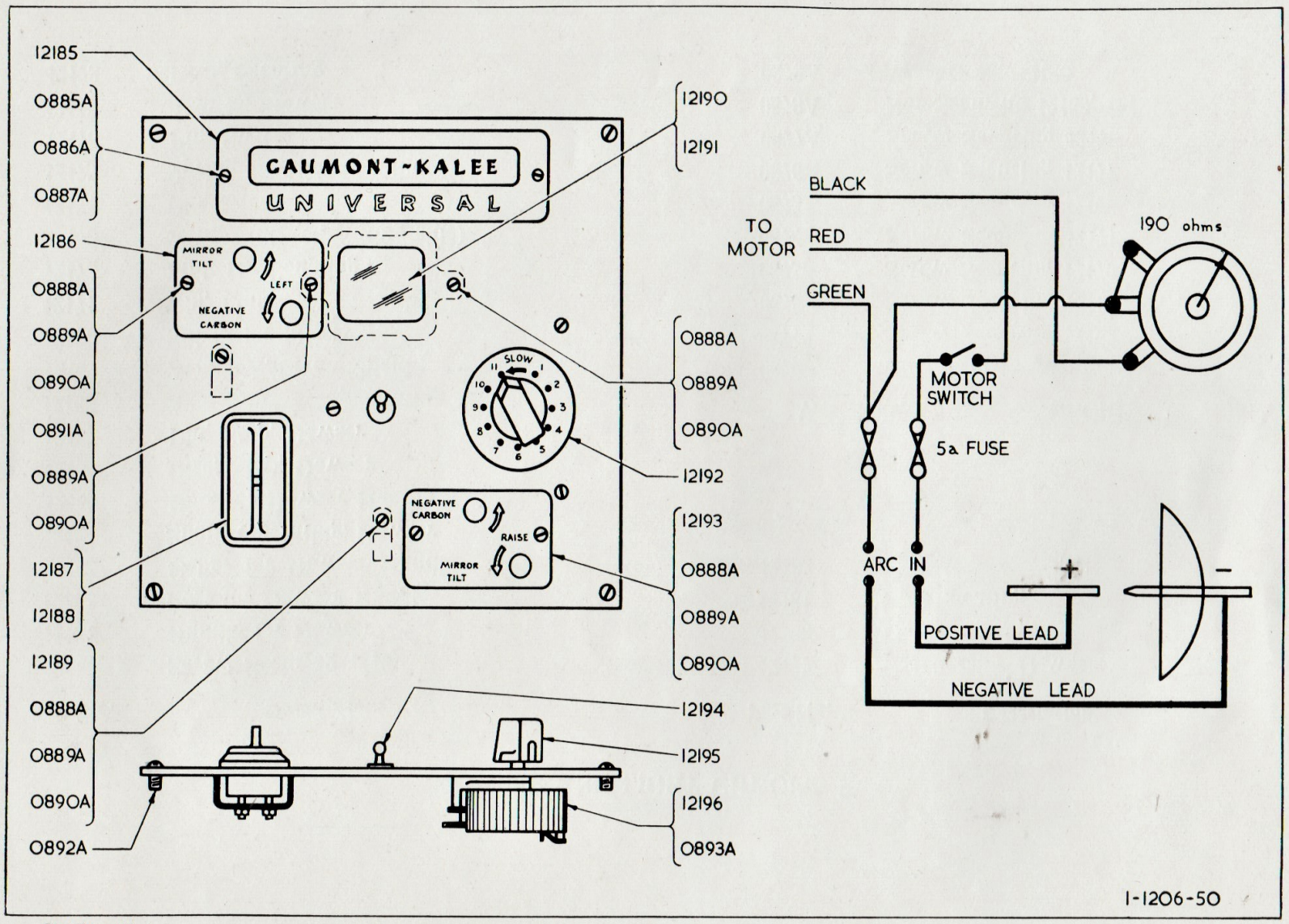

PLATE Nº 6

REAR CONTROL PANEL AND WIRING DIAGRAM

Part No.	Description.
12185	Panel, Name
12186	Panel, Top
12187	Fuseholder, 1 amp.
12188	Fuse, 5 amp.
12189	Clip for Cable
12190	Frame for Window
12191	Glass for Window
12192	Panel, Potentiometer
12193	Panel, Bottom
12194	Switch for Motor
12195	Knob for Potentiometer
12196	Potentiometer, 190 ohms.

WASHERS, PINS AND SCREWS

0885A	Screw Securing 12185
0886A	Nut Securing 12185
0887A	Washer for 12185
0888A	Screw Securing 12186, 12189, 12190, 12193
0889A	Nut Securing 12186, 12189, 12190, 12193
0890A	Washer for 12186, 12189, 12190, 12193
0891A	Screw Securing 12186, 12190
0892A	Screw Securing Rear Control Panel
0893A	Screw Securing 12192, 12196

Page twenty-nine

Page thirty

COMPLETE BURNER FEED MECHANISM

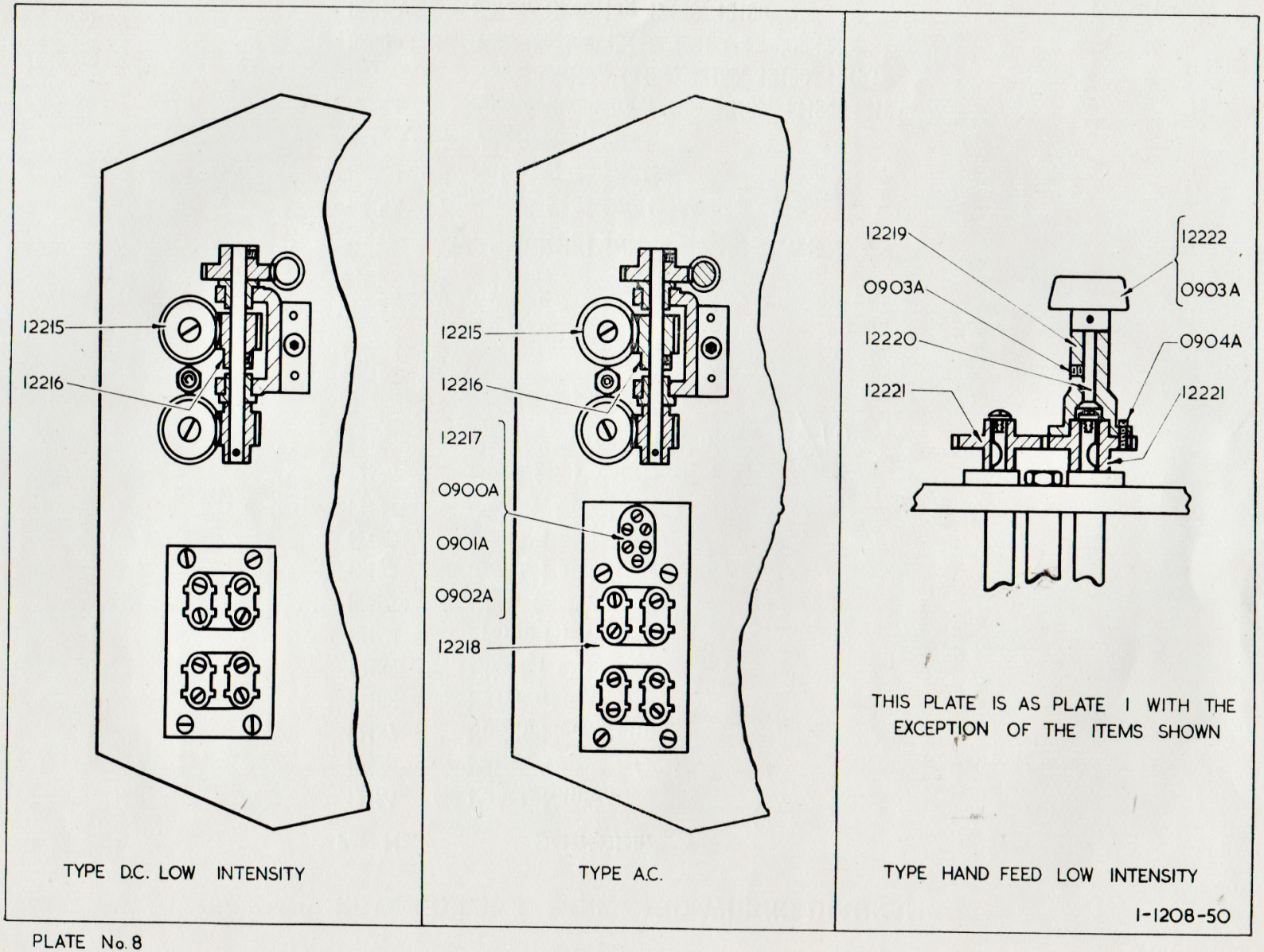

PLATE No. 8

COMPLETE BURNER FEED MECHANISM

Part No.	Description.
	TYPE D.C. LOW INTENSITY
12215	Worm Wheel, Positive
12216	Worm, Positive
	TYPE A.C.
12215	Worm Wheel, Positive
12216	Worm, Positive
12217	Block, Terminal, 2-way
12218	Panel, Terminal
	TYPE HAND FEED, LOW INTENSITY
12219	Hub for Gear
12220	Spindle
12221	Gear, Hand Feed
12222	Knob, Moulded
	WASHERS, PINS AND SCREWS
0900A	Screw Securing 12217
0901A	Nut Securing 12217
0902A	Washer for 12217
0903A	Screw Securing 12220 and 12222
0904A	Screw Securing 12219

Page thirty-one

IMPORTANT

Plates, Numbers 7, 9 and 11, shew details of alternative Carbon-Holder arrangements as indicated in Plates 12, 13, 14 and 15.

The differences are occasioned by the varieties of Lamp-Arrangements available; thus Plate 12 refers to the D.C. High Intensity Lamp; Plate 13 refers to D.C. Low Intensity; Plate 14 refers to A.C.; and Plate 15, Hand-Feed Low Intensity.

Page thirty-two

A GAUMONT-KALEE PRODUCT

by

MORTIMER HOUSE
37-41 MORTIMER STREET
LONDON W.1

TELEPHONE: MUSEUM 5432
TELEGRAMS: GEBEKAY, WESDO, LONDON