Technical Data Sheets

GAUMONT-KALEE

MODELS 20 & 19

Operating & Installation Instructions

C O N T E N T S

		Page No.
SECTION 1.	G.K. 20 and 19 PROJECTORS	
	Description	1 - 2
	Oiling Instructions	3 - -
	Operating Instructions	3 - 5
	Drawing No. CA.11765 - Complete Projector Gearing	
	Parts List for Drawing No. CA.11765	6 - -
	Drawing No. 100/31/10797 - Complete G.K. 20 Projector	
	Parts List for Drawing No. 100/31/10797	7 - -
	Drawing No. 100/31/12540 - Complete G.K. 19 Projector	
	Parts List for Drawing No. 100/31/12540	8 - -
	Drawing No. 100/31/12800/1 - Gearing Details 19 & 20.	
	Parts List for Drawing No. 100/31/12800/1	9 - -
	Drawing No. 100/31/12800/2 - Complete Projector Mechanism 19 & 20	
	Parts List for Drawing No. 100/31/12800/2	10 -
SECTION 2.	ADAPTER GEARING	
	Drawing No. 100/32/9401 - Adapter Gearing	
	Parts List for Drawing No. 100/32/9401	11 -
	Drawing No. 100/32/13225 - Adapter Gearing	
	Parts List for Drawing No. 100/32/13225	12 -
SECTION 3.	PRESIDENT ARC LAMP	
	Description	13 - 14
	Operating and Maintenance	15 - -
	Drawing No. 100/31/12000 - Complete 14" President Arc Lamp	
	Parts List for Drawing No. 100/31/12000	16 - -
	Drawing No. 100/31/12720 - Complete Burner Mechanism	
	Parts List for Drawing No. 100/31/12720	17 - -
	Drawing No. 100/31/13200 - Arrangement of Dowser Mechanism and Carcase	
	Parts List for Drawing No. 100/31/13200	18 - -
	Drawing No. 100/31/13260 - Complete Rear Control Panel	
	Parts List for Drawing No. 100/31/13260	19 - -
	Drawing No. 100/32/12584 - Assembly of Negative Carriage	
	Parts List for Drawing No. 100/32/12584	20 - -
	Drawing No. 100/32/12593 - Assembly Positive Carriage	
	Parts List for Drawing No. 100/32/12593	21 - -
	Drawing No. 100/32/12676 - Assembly Positive Gear Box	
	Parts List for Drawing No. 100/32/12676	22 - -
	Drawing No. 100/32/12687 - Assembly Negative Gear Box and Motor	
	Parts List for Drawing No. 100/32/12687	23 - -
	Wiring Details Drawing No. 100/33/13880	24 - -
	Drawing No. CA.12589 - Complete Mirror Holder	
	Parts List for Drawing No. CA.12589	25 - -
SECTION 4.	G.K. 20 STAND	
	Description	26 - -
	Drawing No. 1/1943/49 - Installation Details	
SECTION 5.	G.K. 19 STAND	
	Description	27 - -
	Drawing No. 1/1944/49 - Installation Details	
SECTION 6.	G.K. 20 INSTALLATION	
	Description	28 - -
	Drawing No. 1/2045/49 - Installation Details	
SECTION 7.	PICTURE CHANGEOVER	
	Description	29 - -
	Drawing No. 1/1936/48)	
	Drawing No. 1/1937/48)	
	Drawing No. 1/1938/48)	
	Drawing No. 1/1939/48) Wiring Diagrams	
	Drawing No. 1/1940/48)	
	Drawing No. 1/1941/48)	

C O N T E N T S

CONTINUED

		Page No.
SECTION 8.	G.K. 19 & 20 EQUIPMENTS. SOUNDHEAD TYPE 378	
	Description	30 - 34
	Drawing No. 83003 - Sprocket Shaft Unit	
	Parts List for Drawing No. 83003	35 - -
	Drawing No. 83012 - Layshaft Assembly	
	Drawing No. 83096 - Sprocket Roller and Arm Assembly	
	Drawing No. 83156 - Flywheel Shaft and Housing Assembly	
	Parts List for Drawing No. 83156	36 - -
	Drawing No. 378000 - Model 378 Soundhead	
	Parts List for Drawing No. 378000	37 - -
	Drawing No. 378001 - Scanning Unit Assembly	
	Parts List for Drawing No. 378001	38 - -
	Drawing No. 378024 - Jockey Roller Assembly	
	Parts List for Drawing No. 378024	39 - -
	Drawing No. 378036 - Layon Roller Assembly	
	Parts List for Drawing No. 378036	40 - -
	Drawing No. 378050 - Taylor Hobson Optical Unit	
SECTION 9.	G.K. 19 & 20 EQUIPMENTS. AMPLIFIERS	
	Description	41 - -
	Drawing No. C.563000 - Voltage Amplifier Mark II.	
	Parts List for Drawing No. C.563000	42 - -
	Drawing No. 384000 - Voltage Amplifier	
	Parts List for Drawing No. C.384000	43 - -
	Drawing No. C.415000 - Power Amplifier	
	Parts List for Drawing No.C.415000	44 - 45
	Drawing No. C.416000 - Exciter Lamp Supply Panel	
	Parts List for Drawing No.C.416000	46 - -
	Drawing No. C.440000 - Exciter Lamp Changeover Box	
	Parts List for Drawing No.C.440000	47 - -
	Drawing No. C.369000 - Power Amplifier	
	Parts List for Drawing No.C.369000	48 - 49
	Drawing No. Y.12334 - Exciter Lamp Wiring Layout	
	Drawing No. Y.12335 - Exciter Lamp Wiring Layout	
SECTION 10.	DUOSONIC SPEAKERS	
	Description	50 - 52
	Drawing No. C.402000 - Type 402 Dividing Network	
	Parts List for Drawing No.C.402000	53 - -
	Drawing No.C.443000 - Type 443 Dividing Network	
	Parts List for Drawing No.C.443000	54 - -
SECTION 11.	TUNING OF EQUIPMENTS	
	Description	55 - 56
SECTION 12.	DUAL CHANNEL 20w. EQUIPMENT	
	Description	57 - -
	Drawing No. C.477000 - Type 477 Voltage Amplifier	
	Parts List for Drawing No. C.477000	58 - -
	Drawing No. C.478000 - Control Box	
	Parts List for Drawing No.C.478000	59 - -
SECTION 13.	40w. EQUIPMENT	
	Description	60 - 61
	Drawing No. C.476000 - Control Box	
	Parts List for Drawing No. C.476000	62 - -
SECTION 14.	NON.SYNC.	
	Drawing No. C.84000 - Non-Sync.	
	Parts List for Drawing No.C.84000	63 - -
SECTION 15.	LAYOUTS OF PROJECTION ENCLOSURES	
	Drawing No. DV.5153 - Layout of Projection Enclosure (20w. Single)	
	Parts List for Drawing No. DV.5153	64 - 67
	Drawing No. DV.5156 - Layout of Projection Enclosure (20w. Single)	
	Parts List for Drawing No. DV.5156	68 - 71
	Drawing No. DV.5162 - Layout of Projection Enclosure (20w. Dual)	
	Parts List for Drawing No. DV.5162	72 - 76
	Drawing No. DV.5164 - Layout of Projection Enclosure (40w. Dual)	
	Parts List for Drawing No. DV.5164	77 - 81
	Drawing No. DY.4926 - Crypto	
	Drawing No. DY.4927.	

THE G.K. 20 AND G.K. 19 PROJECTORS

The Projector does not itself bolt directly to the top of the soundhead, but is mounted on a detachable base which in turn attaches to the soundhead, which gives flexibility to suit other soundheads and avoids the inconvenience which would sometimes arise, were it always necessary to attach the projector by bolts from beneath the soundhead into tapped holes in the projector base.

American practice employs a small 17-tooth pinion which meshes with the projector gear train. This is an inconveniently small size, which, used with an oil bath mechanism, involves an external gear train in order to keep the projector drive shaft at sufficient height above the oil level to avoid danger of oil leakage, or the employment of a stuffing box or equivalent expedient. This difficulty has been avoided by substituting for the 17-tooth pinion one of 34-teeth, running at the same speed and at the same relative centre distance, thus maintaining interchangeability of soundhead drives. This 34-toothed pinion meshes directly with a drive gear mounted on the bottom sprocket shaft which is carried through the frame on both sides. This is the lowest bearing of the machine and is thus the limit to the amount of oil which the mechanism can contain without overflow.

The projector body is a substantial box casting, the bottom of which is the oil sump. The mechanism gear train runs in an oil bath, with oil circulated by a gear pump and distributed after passing through a filter, readily detachable for cleaning. The rear cover of the machine has a large clear window for viewing the mechanism and the working of the oil distribution; a "sight" window is provided at the operating side to show the correct oil level. This is marked with a series of lines to indicate the correct level corresponding to different angles of tilt. Optional positions are provided for an oil drain plug in the front end, and on the non-operating side of the mechanism, to suit different soundheads. The floor of the box casting is sloped internally so that the oil can be drained from the front, even in the case of a positive rake.

The projector gear train comprises throughout, cast iron pinions and fibre gears in pairs. All have helical teeth for quiet running and their ratios have been worked out to secure a "hunting tooth" condition in each pair, conducive to quiet running. The drive to the shutter shaft, which is at right angles to the main train, is by 45° spiral gears. Racking or framing is effected by rotation of the intermittent unit about the sprocket axis, timing compensation being obtained by sliding in synchronization the spiral driven gear on the shutter shaft.

The intermittent unit has a large size cross and cam of 2" nominal diameter. All working parts are of the heat treated steel precision ground. The roller is ridigly supported on a fixed pin carried between cheeks on both sides. The flywheel is mounted directly upon the cam shaft, there being no gearing inside the unit. The mechanism operates inside an oil box which is constantly flooded in all working positions. Adequate oil return arrangements prevent leakage of oil. The unit is rigidly supported in the projector in a long fixed quill in which it rotates for masking adjustment. The intermittent sprocket, as all the projector sprockets, is hardened and ground.

The top and bottom sprocket assemblies are constructed as units which can be detached without dismantling. The intermittent unit and also the pump are similarly removable as units. The shutter shaft which is supported in bearings in the frame can also be withdrawn without dismantling. The rest of the gear train, including the housing which receives the intermittent unit, is removable in the form of two complete sub-assemblies.

The shutter case houses a standard type single bladed shutter, the transformer for the threading lamps and the magnet of the changeover unit with associated wiring and fuses.

N.B. The G.K.20 projector incorporates the electrical changeover whereas the G.K. 19 projector merely has a governor operated safety shutter, hence the magnet is not included in the shutter case in this instance.

An advantage of the open-sided mechanism is the freedom from restrictions imposed upon the lens holder by enclosure, which makes it easy to use large diameter, big aperture lenses. It has however been possible to retain much of this advantage by arranging the lens holder outside the enclosure. The bore of the holder is standard, 2.781" diameter and it is furnished with a removable liner to take 2.062" diameter. The gripping length, while adequate, is kept short and close to the film plane, and permits the use of large diameter lenses with still larger stepped front cells. It is thus possible to use f 1.9 lenses throughout the whole range of focal lengths up to 7".

The gate opens with a parallel action, is self sustaining when open, and operated by a conveniently located handle. The front part of the gate assembly which carries the spring loaded film guide rollers, pressure pads and is fitted with an adjustable tension device for the film skates, is carried in a box shaped casting which also receives the rear end of the projection lens. The gate simply hooks into a location in the face of this box. This construction gives utmost rigidity combined with accessibility as the gate assembly is instantly removable for cleaning.

The gate has twin apertures; the lower one is the projection aperture, and the upper one is for verification that the film is in frame. When the gate is closed the stray end of a broken film cannot intrude into the light path.

The whole gate assembly is detachable as a unit. A polished reflector is provided to reject the heat of overspill illumination and this, together with massive construction and ample radiating surface, assures cool operation. The maskplate is of hardened steel and retained in slots in the gate bracket from which it is quickly detachable.

The framing aperture and the working side of the projector are illuminated by a pair of small low voltage lamps. The lamps are fed from a transformer tapped to suit both 110/115 volt supplies, and 200/240 volt supplies.

The safety shutter is housed in the rear of the gate unit, and is actuated by a centrifugal governor on the shutter shaft of the projector.

The electrically operated picture changeover device operates on the safety shutter, but in such a way that no derangement of the changeover system can prevent the shutter closing should the force exerted by the centrifugal governor fail due to the slowing down or stopping of the machine.

The safety shutter is raised by a floating lever acted upon independently by both the Governor and a changeover magnet. Neither acting alone can open the shutter, which can only open and remain open so long as both exert a pull. The changeover operating mechanism proper is very simple, consisting merely of a tractive magnet arranged to pull down an armature connected to the floating lever operating the shutter. Magnet core and armature are laminated and fitted with slug rings, and wound for operating on A.C. supply at "Mains Voltage". The magnet is in circuit the whole time that the picture is on the screen; changeover is effected by a throw-over switch which breaks the magnet circuit of the outgoing machine, allowing its shutter to fall and simultaneously energises the magnet of the incoming machine, the shutter of which opens because its actuating lever is being pulled both by centrifugal and magnetic force.

A two station switch circuit is employed which allows operation from either machine. This can be extended for three machine operation. The picture changeover could readily be coupled to the sound changeover, but amongst operators there is a divergency of opinion as to the merits of such a provision.

Note: Further details regarding the Changeover are given in Section 7.

No. 19 Projector is not fitted with a changeover.

The Pyrene Fire Extinguisher equipment comprises a sealed cylinder of compressed carbon dioxide gas and a spring loaded piercer, which punctures the seal and releases the gas. This pierces is held back by a celluloid loop. A quick burning gun cotton fuse instantly transmits a fire at any of several points along the film path to the loop which ignites and releases the piercer. Pipes conduct the gas to various points along the film path, effectively quenching any fire. The gas is also led into both top and bottom spool boxes and to pistons which knock off switches cutting the power supply to both motor and lamp, thus shutting down the equipment.

PROJECTOR MECHANISM

OILING INSTRUCTIONS

1. Remove large knurled head screw on top of Projector Frame and fill with Kalee "Superoil" to level indicated by white line on Oil Sight Window situated near bottom Projector sprocket.

Note: Fill with oil after Projector has been set at correct rake and by means of the Masking Knob ensure that the filter inlet of the Cross Box is immediately beneath the oil thrower on the Top Inter Gear. This ensures that the Cross Box is filled and that the correct oil sight line is used. The Projector should be filled slowly as all oil passes through the Filter.

2. The Projector may be drained by using either of the 2 plugs provided at bottom of the Main Casting.

Note: It is important that old oil be regularly drained out and the projector replenished with clean oil - Kalee "Superoil". It is recommended that the oil be changed fortnightly for the first month and thereafter monthly.

3. Oil all rollers etc. and carefully wipe off any excess.

OPERATING INSTRUCTIONS

The Gate

1. To Open: Turn the handle situated in front of the light cone in an anti-clockwise direction. The gate remains open, until the handle is returned to the horizontal "closed" position.

   N.B. Projector Door Cannot be closed whilst Gate is still open

2. Gate Plate: This assembly complete with Top Guide Rollers, Pressure Skates etc. may be removed when the Gate is opened by simply lifting to disengage then withdrawing to the front. The Guide Rollers, Pressure Skates etc. are carefully adjusted on leaving the factory and should give perfect projection under all normal circumstances.

3. Adjustable Gate Tension Plate: This assembly complete with top guide rollers etc. may be removed in just the same way as the standard gate plate. The tension on the skates is variable by means of a knob on the front, the minimum being when set at No.1 and increasing to the maximum setting at No.5. It will generally be found that most satisfactory results are given at settings 1,2 or 3 and No.5. setting need only be used under extreme conditions.

4. The Mask Plate: Lifts directly out of slots in Main Gate Bracket when the Gate is open.

Top and Bottom Rollers

For threading, the complete Roller Bracket is rotated on its pivot away from its sprocket. A stop is provided which allows sufficient opening for threading, a set screw operating this is against the stop in the closed position providing adjustment. This is adjusted before leaving the factory to give two thicknesses of film between rollers and sprockets.

Timing of Shutter

The Shutter is mounted on the Shutter Spindle gear boss and is secured from rear by clamp ring. For removing Bottom Ghost on picture rotate the shutter anti-clockwise on its boss.

N.B. Care must be taken that the clamp screws are re-tightened before running Projector.

Masking.

This is controlled by the maroon knob in the front end of the projector. A clutch is incorporated in this knob to give automatic lock against slip in either direction.

Instructions for removal of Units. Refer to Drawings in Section 1.

1. Oil Filter

   Remove flange on top of projector frame when the complete filter assembly can be lifted out.

2. Oil Pump

This is situated on the rear side of projector in the bottom front corner. Remove the 3-4BA Screws in the flange when the pump can be withdrawn complete by utilising the three extra holes in the flange tapped 2BA. Use 3-2BA Screws about ¾" long which thrust against the projector main casting and so the pump will be extracted. The main oil feed pipe is merely a "push" fit on the rear of the pump and only requires easing out by the finger pressure when the pump is being extracted, i.e. the oil pipe may remain in position in the projector.

Note: When replacing the pump carefully clean the flange and its Seating and insert a new Sealing Washer.

Note that a filter is fitted integral with the pump and is readily removed by releasing the large diameter head screw in the pump flange. The filter, which is of cartridge form is then withdrawable complete with the screw. It is recommended that this filter be removed regularly and washed in parrafin.

3. Inter Sprocket

(a) Remove Stripper which is secured by 2-BA screws underneath Light Cone.
(b) Remove screw and key washer etc. at end of sprocket spindle when the sprocket may be withdrawn.

Note: This sprocket is reversible on spindle.
Great care should be taken not to damage teeth.

4. Inter Unit

(a) Remove sprocket as above.
(b) Remove Rear Cover by releasing 10 - 2 BA screws and breaking. oil seal. If Oil Seal is broken carefully a new gasket will not be necessary.
(c) Release special ⅝" B.S.F. clamp nut securing unit to Quadrant when unit may be withdrawn from rear of machine.

5. Gate.

(a) Remove Lens from Holder
(b) Remove Inter Sprocket - see para (3)
(c) Remove complete Gate Plate - see operating instructions.
(d) Release Safety Shutter Lever at top of light cone.
(e) Release 2 screws securing Gate to front of Projector frame when Gate can be withdrawn off locating dowels. Take care that lifting linkage is released from safety shutter.

6. Top Sprocket

(a) Remove stripper from post.
(b) Release set screw securing sprocket to spindle and withdraw.

Note: When fitting new sprocket ensure that sprocket is pushed on Spindle hard up against stop.

7. Top Sprocket Unit

(a) Remove Rear Cover as 4 (b)
(b) Release driving gear from sprocket spindle.
This gear is secured by an Allen set screw and Woodruff Key.
(c) Release Sprocket Bearing on front face of projector when complete unit may be withdrawn.

Note: If care is taken when breaking oil seal underneath sprocket bearing a new seal need not be fitted.

8. Bottom Sprocket

(a) Remove driving pin for handle, this is a taper pin hence take care to drive out from the small end.
(b) Release 2 securing screws in base of out-rigger bearing when it may be removed complete with stripper.

9. Bottom Sprocket Unit

(a) Remove driving gear at rear of Projector.
This is secured by large head screw and Woodruff Key.
(b) Remove all screws securing bearing on front face including the 2 screws securing the out-rigger bearing when complete unit may be withdrawn.
If care is taken when breaking oil seal underneath sprocket bearing a new seal need not be fitted.
(c) When replacing unit take care not to damage gears when meshing into the gear train.

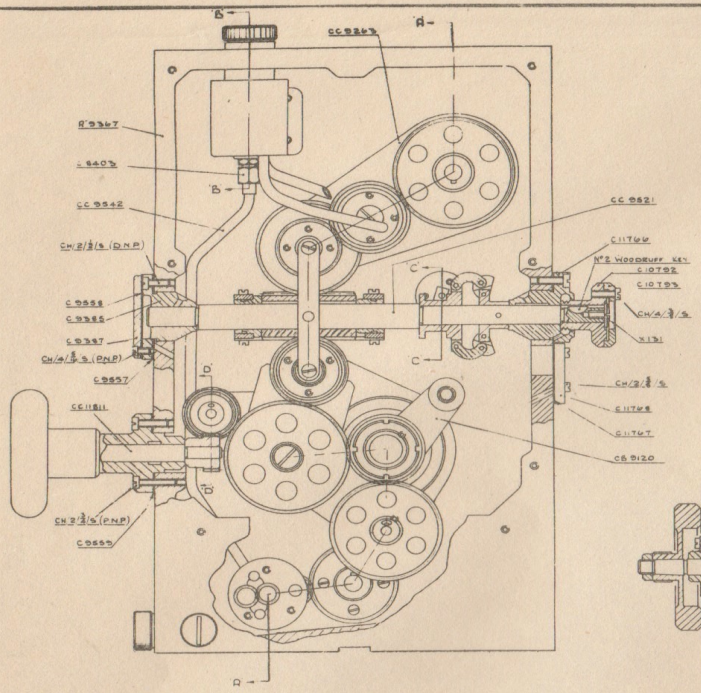

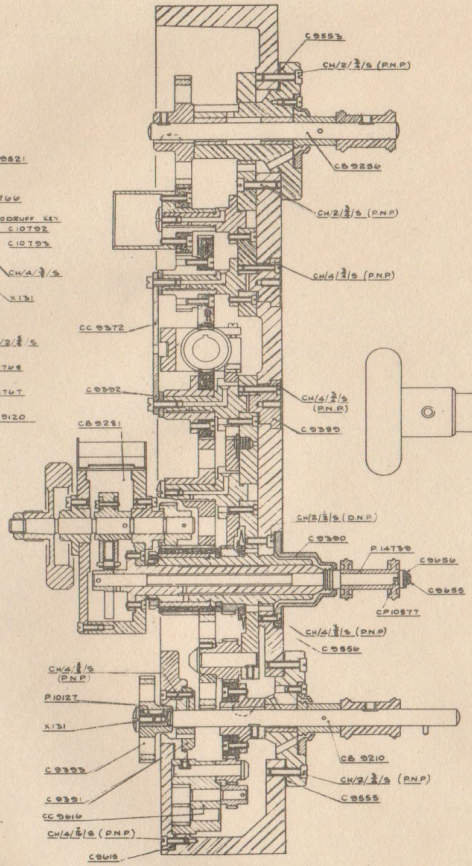

SECTION 'A-A' SHOWING
DEVELOPMENT OF GEAR TRAIN

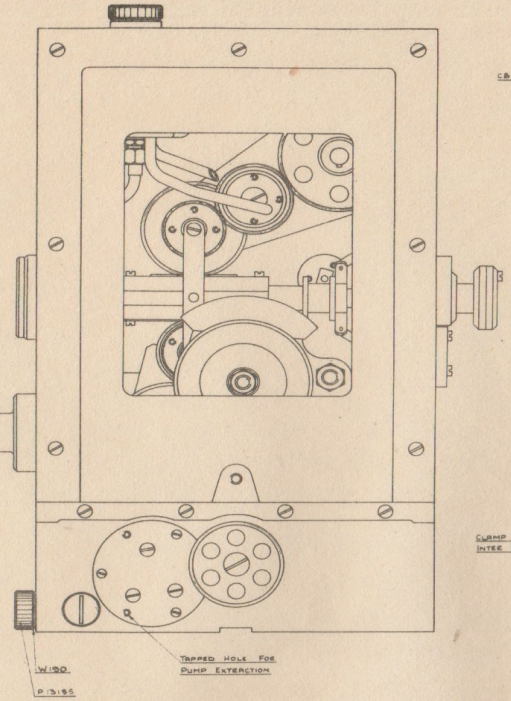

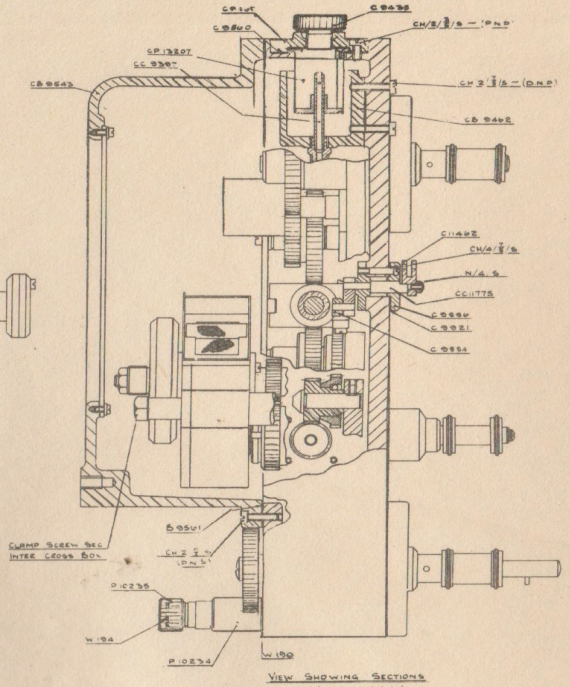

VIEW SHOWING SECTIONS
BY B-B, C-C, D-D

CB 9120	1	COMP INTER GEAR YOKE	A 9367	1	MAIN FRAME	CC 415		OIL SEAL FOR PUMP FLANGE	—		KEY FOR SHUTTER HUB	
CB 9210	1	" ATM SPROCKET UNIT	B 9501	1	OIL SEAL FOR MAIN FRAME	C 9455		SCREW SEC SPROCKET				
CB 9256	1	" TOP				C 9456		WASHER FOR "				
CB 9281	1	" INTERMITTENT UNIT				C 9856		GOVERNOR SPINDLE ROLLER	1/8	2	SCREW SEC GEOR & HUBS	
CB 9402	1	" OIL FEED & PIPES	C 9403	1	UNION NUT	C 9896	1	" " SLEEVE	CH 2 3/8	2	" " OIL FEED	
CB 9643	1	" REAR COVER	C 9385	1	SHTR SHAFT FRONT BRG	C 9821	1	OIL SEAL FOR SHTR LINK	CH/2 3/8	25	" " YOKE BRGS ETC	
			C 9387	1	" " COVER PLATE	C 10793	1	SHUTTER HUB	CH/2 3/8	8	" " RING SHTR SHAFT	
			C 9389	8	LOCATING PLUGS	C 10703	1	" " RING	CH 2 3/8	6	" " STRAP BRG ETC	
CC 9263	1	COMP TOP GEAR YOKE	C 9390	1	OIL DEFLECTOR	C 11402	1	CRANK (COVER SIDE)	CH 2 3/8	3	" " FILLER ADAPTR	
CC 9378	1	" STRAP & KEY	C 9391	1	ATM SPLT REAR BRG	C 11766	1	REAR SHUTTER BRG	CH/4 3/8	2	LOCATING PLUGS	
CC 9397	1	" OIL SIGHT PIPE	C 9392	1	WASHER FOR STRAP	C 11767	1	OIL SEAL FOR REAR BRG	CH/4 3/8	2	" STRAP BRG TIE	
CC 9821	1	" SPINDLE & YOKE	C 9393	1	MAIN DRIVING GEAR	C 11768	1	SEALING PLATE	CH/4 3/8	3	" OIL PUMP	
CC 9842	1	" OIL FEED PIPE	C 9439	1	FILLER PLUG				CH 4 3/8	7	" DEFLECTOR	
CC 9616	1	" PUMP	C 9497	1	" " ADAPTOR				CH 4 3/8	4	COVER PLATE	
CC 11775	1	" SAFETY SHUTTER LINK	C 9553	1	OIL SEAL FOR TOP SPLT	P 10127	1	KEY FOR GEAR	CH 4 3/8	3	" " GOVT SLEEVE	
CC 11811	1	" MASKING KNOB	C 9555	1	" " ATM SPL (FRONT	P 10234	1	OIL DRAIN	N 4 S	1	NUT SEC LEVER	
			C 9556	1	" " OIL DEFLECTOR	P 10235	1	" " PLUG	W 130	2	OIL FILLER PLUG PACKING	
			C 9557	1	" " FR SHTR BRG	P 13195	1	" FILLER "	W 134	1	OIL DRAIN WASHER	
CP 10877	1	COMP KEY WASHER	C 9558	1	" " COVER PLATE	~~P 13238~~		~~PACKING FOR OIL FILLER PLUG~~				
CP 13207	1	" OIL FILTER	C 9559	1	" " MASKING KNOB	P 14739	1	INTERMITTENT SPROCKET				
			C 9560	1	" " OIL FILLER							
CODE	N°OFF	DESCRIPTION	CODE	N°OFF	DESCRIPTION	CODE	N°OFF	DESCRIPTION	CODE	N°OFF	DESCRIPTION	

FOR PREVIOUS DESIGN
SEE CB 9557

ISSUE N°				
DATE & SIG				

COMP PROJECTOR GEARING (SINGLE SHUTTER) ~ N° 20 MECHANISM

	DRAWN		
	TRACED		
	CHECKED		
	DATE		

CA 11765

COMPLETE PROJECTOR GEARING (SINGLE SHUTTER)

No.20 MECHANISM

Drawing No. CA.11765

Details	Part No.
Complete Inter Gear Yoke	CB.9120
Complete Bottom Sprocket Unit	CB.9210
Complete Top Sprocket Unit	CB.9256
Intermittent Unit Complete	CB.9281
Oil Reservior and Pipes Complete	CB.9462
Complete Rear Cover	CB.9543
Complete Top Gear Yoke	CC.9263
Complete Strap and Key	CC.9372
Complete Oil Sight Pipe	CC.9397
Complete Spindle and Yoke	CC.9521
Complete Oil Feed Pipe	CC.9542
Complete Oil Pump	CC.9616
Complete Safety Shutter Link	CC.11775
Complete Masking Knob	CC.11811
Complete Key Washer	CP.10877
Complete Oil Filter	CP.13207
Main Frame	A.9367
Oil Seal for Main Frame	B.9561
Union Nut	C.8403
Shutter Shaft Front Bearing	C.9385
Shutter Shaft Cover Plate	C.9387
Locating Plug	C.9389
Oil Deflector	C.9390
Bottom Sprocket Rear Bearing	C.9391
Washer for Strap	C.9392
Main Driving Gear	C.9393
Filler Plug	C.9438
Filler Plug Adapter	C.9467
Oil Seal for Top Sprocket	C.9553
Oil Seal for Bottom Sprocket (Front)	C.9555
Oil Seal for Oil Deflector	C.9556
Oil Seal for Front Shutter Bearing	C.9557
Oil Seal for Cover Plate	C.9558
Oil Seal for Masking Knob	C.9559
Oil Seal for Oil Filler	C.9560
Oil Seal for Pump Flange	C.9615
Screw Securing Sprocket	C.9655
Washer for Sprocket	C.9656
Governor Spindle Roller	C.9884
Governor Spindle Sleeve	C.9886
Oil Seal for Shutter Link	C.9921
Shutter Hub	C.10792
Shutter Ring	C.10793
Crank (Cone Side)	C.11462
Rear Shutter Bearing	C.11766
Oil Seal for Rear Bearing	C.11767
Sealing Plate	C.11768
Key for Gear	P.10127
Oil Drain	P.10234
Oil Drain Plug	P.10235
Oil Filler Plug	P.13185
Intermittent Sprocket	P.14739
Key for Shutter Hub	-
Screw Securing Gear and Hubs	X.131
Screw Securing Oil Reservoir	CH/2/7/8/S
Screw Securing Yoke, Bearings etc.	CH/2/3/4/S
Screw Securing Rear Shutter Bearings etc.	CH/2/5/8/S
Screw Securing Strap Bearing etc.	CH/2/1/2/S
Screw Securing Filler Adapters	CH/2/3/8/S
Screw Securing Locating Plugs	CH/4/3/4/S
Screw Securing Sprocket Bearings etc.	CH/4/5/8/S
Screw Securing Oil Pump	CH/4/7/16/S
Screw Securing Oil Deflector	CH/4/5/8/S
Screw Securing Cover Plate	CH/4/5/16/S
Screw Securing Governor Sleeve	CH/4/7/8/S
Nut Securing Crank	N/4/S
Oil Filler Plug Packing	W.190
Oil Drain Washer	W.194

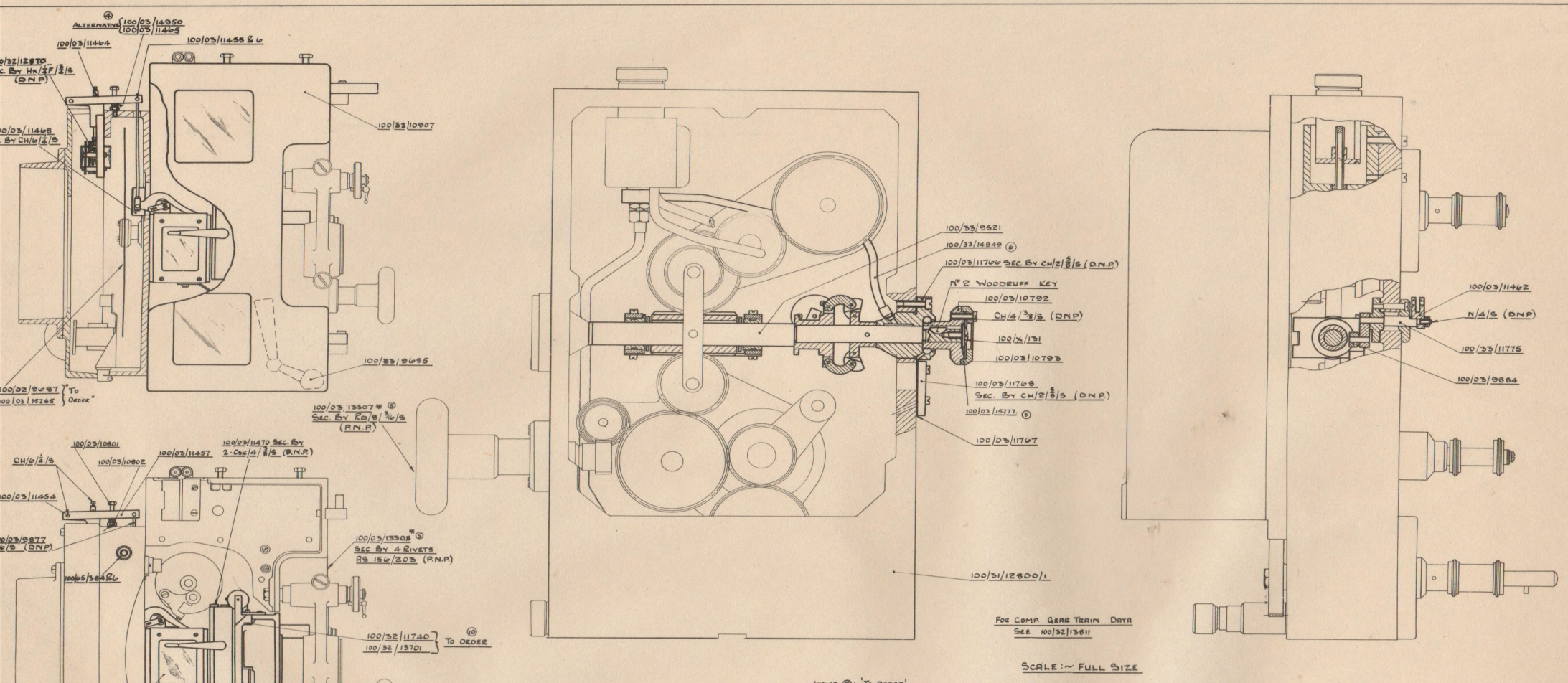

FOR COMP. GEAR TRAIN DATA SEE 100/32/13811

SCALE :~ FULL SIZE

SCALE :~ HALF FULL SIZE

ITEMS ㉘ :~ 'TO ORDER'

FOR COMP. WIRING DATA FOR SHUTTER CASE SEE 100/32/10905 ③

DESPATCH WIRING DIAGRM. OF SHUTTER CASE 100/03/11006 ~ (SIZE 15" x 13")

FOR REFERENCE DRG. OF METAL PANELS USED ⑤ ON GK 20 SEE 100/33/13313 *

100/31/12800/2	1	COMP. PROJ. MECH (COMMON)		100/03/11456	1	SWIVEL SLEEVE		100/31/12800/1	1	COMP. GEARING DETAILS (COMMON)	—	1	KEY FOR SHUTTER HUB
100/32/10907	1	" " DOOR		100/03/11457	1	ROCKER ARM		~~100/33/9522~~	~~1~~	~~OIL SUPPLY PIPE~~ ⑫			
100/32/10798	1	" LIGHT CONE		100/03/11464	1	CROSS PIN		100/33/9521	1	" SPINDLE & YOKE			
100/32/12870	1	" CH/OVER SOLENOID		100/03/11465	1	SPRING (ALTERNATIVE) ④		~~100/33/9842~~	~~1~~	~~" OIL FEED PIPE~~ ⑫			
100/32/11740	1	" GATE ASSY ㉘		100/03/11468	1	COVER		100/33/11775	1	" SAFETY SHTR. LINK	100/X/131	1	SCREW SEC. SHTR HUB
⑤ 100/32/10905	1	" WIRING OF SHTR CASE		100/03/11470	1	SHUTTER STOP		100/33/14849	1	" OIL FEED PIPE ⑫			
⑩ 100/32/13701	1	" WATER COOLED GATE ㉘		100/03/14950	1	SPRING (ALTERNATIVE) ④							
100/33/9685	1	COMP. BTM. SPKE HANDLE											
100/33/13313	1	" SET METAL PANELS *	CH/6/1/8/S		6	SCREW SEC. CLIP & FULCRUM ENDS		100/03/9884	1	GOVERNOR SPOOL ROLLER	CH/2/3/8/S	8	SCREW SEC. REAR SHTR BRG
⑤ 100/32/15624	1	" LIGHT FILTER (TO ORDER)	HX/2/3/8/S		1	" " INTER STEIPPER		100/03/10792	1	SHUTTER HUB	CH/4/3/8/S	3	" " SHTR. HUB
100/03/9687	1	SINGLE SHUTTER (TO ORDER)	HX/2F/3/8/S		2	" " COIL ASSY.		100/03/10793	1	" RING			
⑦ 100/03/15265	1	SPARE SHUTTER FOR USE WITH SINGLE FRAME RECTIFIER ONLY	CSK/4/3/8/S		2	" " SHUTTER STOP		100/03/11462	1	CRANK (CONE SIDE)	RD/8/3/16/S	2	SCREW SEC. LABEL
100/03/9877	1	PUSH ROD						100/03/11766	1	REAR SHUTTER BRG			
② 100/03/15308	1	NAMEPLATE *						100/03/11767	1	OIL SEAL FOR REAR BRG			
100/03/10801	1	ADJUSTING SCREW	N/6/S		2	NUT FOR PUSH ROD		100/03/11768	1	SEALING PLATE	N/4/S	1	NUT SEC. CRANK
100/03/10802	1	LOCKNUT						100/03/13307	1	MARKING LABEL * ⑥			
100/03/10806	1	INTER STEIPPER	BS 156/203		4	RIVET SEC. NAMEPLATE		100/03/15277	1	SEALING WASHER ⑨			
100/03/11454	1	FULCRUM											
100/03/11455	1	SWIVEL PIN											
CODE	N° OFF	DESCRIPTION	CODE	N° OFF	DESCRIPTION			CODE	N° OFF	DESCRIPTION	CODE	N° OFF	DESCRIPTION

SUE. N°	1	2	3	4	5	6	7	8	9	10
ALT. N°	5380	5508	5723	5994	6000	6007	6058	6071	6196	6195
TYPE & SIG.	8/6/40 9775	17/8/48 A.DC	11-10-48 RDC	11-2-49 CSK	14-2-49 DS	17-2-49 RD	11-3-49 9775	17-3-49 RJ.K	8-6-49 DS	9-6-49 DS

COMP PROJECTOR MECHANISM ~ N° 20 OUTFIT

REQ'D ON.						TRACED	CHECKED	DRAWN
100/31/11801							9775	

26·5·48

100/31/10797

COMPLETE PROJECTOR MECHANISM

No. 20 OUTFIT

Drawing No. 100/31/10797

	Details	Part No.
	Complete Projector Mechanism	100/31/12800/?
	Complete Projector Door	100/32/10907
	Complete Light Cone	100/32/10798
	Complete Changeover Solenoid	100/32/12870
*	Complete Gate Assembly	100/32/11740
	Complete Wiring of Shutter Case	100/32/10905
*	Complete Water Cooled Gate	100/32/13701
	Complete Bottom Sprocket Handle	100/33/9685
*	Complete Set Metal Panels	100/33/13313
*	Complete Light Filter	100/32/15624
*	Single Shutter	100/02/9687
*	Special Shutter for use with Single Phase Rectifier	100/03/15265
	Push Rod	100/03/9877
*	Nameplate	100/03/13308
	Adjusting Screw	100/03/10801
	Locknut	100/03/10802
	Inter Stripper	100/03/10806
	Fulcrum	100/03/11454
	Swivel Pin	100/03/11455
	Swivel Sleeve	100/03/11456
	Rocker Arm	100/03/11457
	Cross Pin	100/03/11464
	Spring (Alternative)	100/03/11465
	Cover	100/03/11468
	Shutter Stop	100/03/11470
	Spring (Alternative)	100/03/14950
	Screw Securing Clip and Fulcrum etc.	CH/6/1/4/S
	Screw Securing Inter Stripper	HX/2/3/8/S
	Screw Securing Coil Assembly	HX/1/4F/3/4/S
	Screw Securing Shutter Stop	CSK/4/3/8/S
	Nut for Push Rod	N/6/S
	Rivet Securing Nameplate	AS.156/203
	Complete Gearing Details	100/31/12800/1
	Complete Spindle and Yoke	100/33/9521
	Complete Safety Shutter Link	100/33/11775
	Complete Oil Feed Pipe	100/33/14949
	Governor Spindle Roller	100/03/9884
	Shutter Hub	100/03/10792
	Shutter Ring	100/03/10793
	Crank (Cone Side)	100/03/11462
	Rear Shutter Bearing	100/03/11766
	Oil Seal for Rear Bearing	100/03/11767
	Sealing Plate	100/03/11768
*	Masking Label	100/03/13307
	Sealing Washer	100/03/15277
	Key for Shutter Hub	-
	Screw Securing Shutter Hub	100/X/131
	Screw Securing Rear Shutter Bearing	CH/2/5/8/S
	Screw Securing Shutter Hub	CH/4/3/8/S
	Screw Securing Label	RD/8/3/16/S
	Nut Securing Crank	N/4/S

Items * 'To Order'

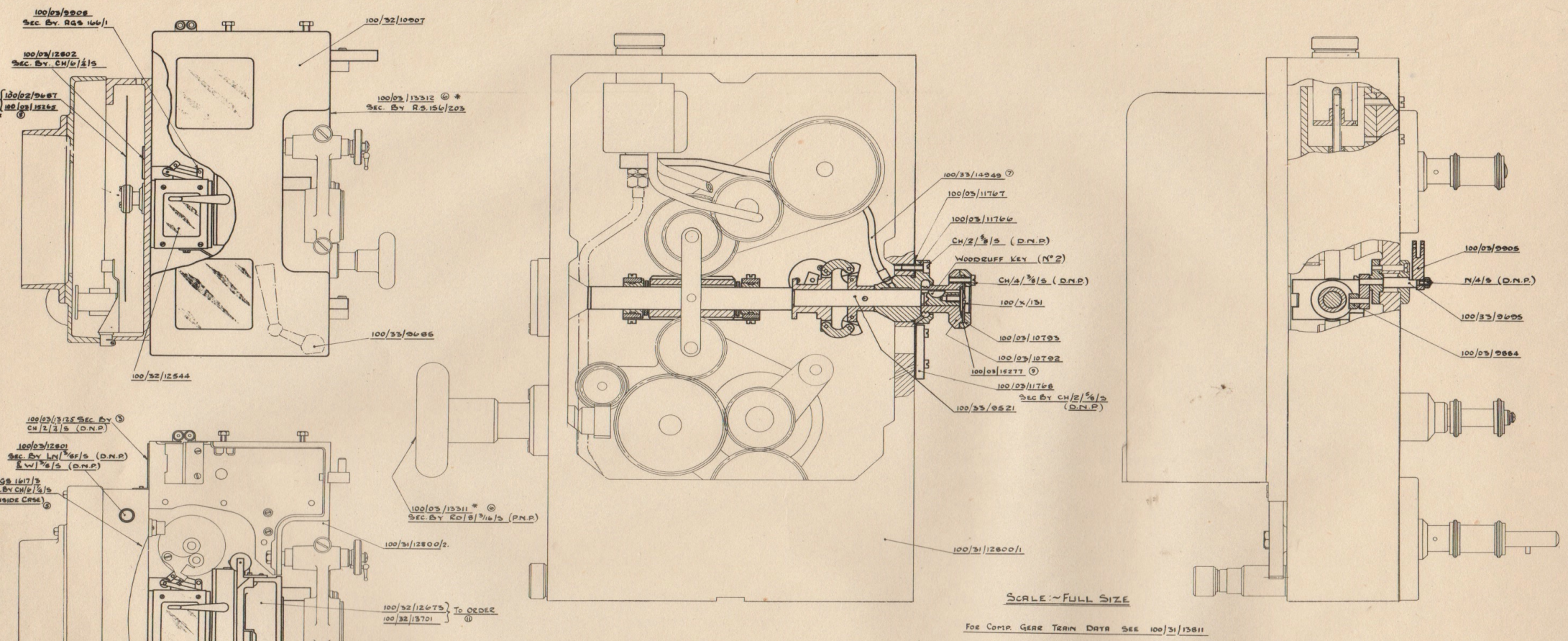

SCALE:~ HALF FULL SIZE

SCALE:~ FULL SIZE

For Comp. Gear Train Data See 100/31/13811

* For Reference Drg Of Panels ② On G.K. 19 See 100/33/13314 ⑩

For Comp. Wiring Data For Shutter Case See 100/32/13973 ④

For Despatch Wiring Diagram Of Shutter Case See 100/03/13974 (Size 15" x 13")

Items ⑫ - 'To Order'

Comp: Projector Mechanism

100/31/12800/1	1	Comp. Projector Mech: (Common To 19/20, & 21 Outfits	100/03/12801	1	Cover Screw For Sht[E] Case	100/31/12800	1	Gearing Details	100/03/13311	1	Masking Label ⑩
			100/03/13312	1	Nameplate ⑩	100/33/14949	1	Comp. Oil Feed Pipe ⑦	100/03/15277	1	Sealing Washer ⑨
⑪ 100/32/13701	1	Comp Water Cooled Gate ⑫	100/03/9908	1	Pin For Crank	~~100/33/9539~~	~~1~~	~~Comp. Oil Sight Pipe ⑦~~			
100/32/10907	1	Comp. Proj. Door	100/32/15624	1 ⑫	Comp. Light Filter (To Order)	100/33/9642	1	" " Feed " ⑦	—	1	Key For Shutter Hub
100/32/12544	1	" Light Cone				100/33/9521	1	Comp Shutter Shaft			
100/32/12673	1	" Gate ⑫	Hx/2/3/8/S	1	Screw Sec. Inter Stripper	100/33/9605	1	" Safety Sht[E] Link	100/X/131	1	Screw Sec. Shutter Hub
④ 100/32/13973	1	" Wiring Of Shutter Case	LN/3/8/S	1	Nut Sec. Cover Screw						
100/33/9693	1	Btm. Sprocket Handle	W/3/8/S	1	Washer Sec. " "	100/03/9884	1	Governor Spole Roller			
⑩ 100/33/13314	1	Comp. Set Metal Panels *	CH/6/2/S	⑨ 6	Screw Sec Aperture Cover[ER]	100/03/10792	1	Shutter Hub	CH/2/3/8/S	6	Screw Sec. Rear Sht[E] Beg.
100/02/9687	1	Single Shutter To Specific Shutter For Use With Single Drive Equipment Order	CH/2/2/S	⑨ 2	" Cover Plate	100/03/10793	1	" Ring	CH/4/3/8/S	3	" " Shutter Ring.
⑧ 100/03/13268	1		RS 156/203	4	Rivet Sec. Nameplate	100/03/9905		Crank ~ Cone Side	EO/8/3/16/S	2	" " Masking Label
③ 100/03/13125	1	Cover Plate (Top Of Sht[E] Case)	RGS 166/1	1	Split Pin	100/03/11766		Rear Shutter Bearing			
100/03/10806	1	Inter Stripper	RGS 1617/3 ⑨	1	Clip	100/03/11767	1	Oil Seal For Rear Beg.	N/4/3	1	Nut Sec. Crank
100/03/12802	1	Aperture Cover For Sht[E] Case				100/03/11768	1	Sealing Plate			
Code	N° Off	Description	Code	N° Off	Description	Code	N° Off	Description	Code	N° Off	Description

Comp. Projector Gearing

Size N°	1	2	3	4	5	6	7	8	9	10	11
	5580	5508	5556	5723	5724	6000	6007	6058	6071	6186	6195
	8/6/48	10/8/48 ADS.	24/8/48 DS	11/10/48 DS	11/10/48 RDS	16/2/49 ADS	16/2/49 ADS	11/3/49	17/3/49	17/6/49 DS	17/6/49 DS

Comp: Projector Mechanism ~ G.K. 19

Size	Dwg. No.	Traced	Checked	Drawn	T.S.48
	100/31/12540				

COMPLETE PROJECTOR MECHANISM

No. 19 OUTFIT

Drawing No. 100/31/12540

	Details	Part No.
	COMPLETE PROJECTOR MECHANISM	
	Complete Projector Mechanism	100/31/12800/2
*	Complete Water Cooled Gate	100/32/13701
	Complete Projector Door	100/32/10907
	Complete Light Cone	100/32/12544
*	Complete Gate	100/32/12673
	Complete Wiring of Shutter Case	100/32/13973
	Bottom Sprocket Handle	100/33/9685
*	Complete Set Metal Panels	100/33/13314
*	Single Shutter	100/02/9687
*	Special Shutter for use with Single Phase Rectifier	100/03/15265
	Cover Plate (Top of Shutter Case)	100/03/13125
	Inter Stripper	100/03/10806
	Aperture Cover for Shutter Case	100/03/12802
	Cover Screw for Shutter Case	100/03/12801
*	Nameplate	100/03/13312
	Pin for Crank	100/03/9908
*	Complete Light Filter	100/32/15624
	Screw Securing Inter Stripper	HX/2/3/8/S
	Nut Securing Cover Screw	LN/3/8/S
	Washer Securing Cover Screw	W/3/8/S
	Screw Securing Aperture Cover etc.	CH/6/1/4/S
	Screw Securing Cover Plate	CH/2/1/4/S
	Rivet Securing Nameplate	AS.156/203
	Split Pin	AGS.166/1
	Clip	AGS.1617/3
	COMPLETE PROJECTOR GEARING	
	Gearing Details	100/31/12800
	Complete Oil Feed Pipe	100/33/14949
	Complete Shutter Shaft	100/33/9521
	Complete Safety Shutter Link	100/33/9695
	Governor Spindle Roller	100/03/9884
	Shutter Hub	100/03/10792
	Shutter Ring	100/03/10793
	Crank - Cone Side	100/03/9905
	Rear Shutter Bearing	100/03/11766
	Oil Seal for Rear Bearing	100/03/11767
	Sealing Plate	100/03/11768
	Masking Label	100/03/13311
	Sealing Washer	100/03/15277
	Key for Shutter Hub	-
	Screw Securing Shutter Hub	100/X/131
	Screw Securing Rear Shutter Bearing	CH/2/5/8/S
	Screw Securing Shutter Ring	CH/4/3/8/S
	Screw Securing Masking Label	RD/8/3/16/S
	Nut Securing Crank	N/4/S

Items * - 'To Order'

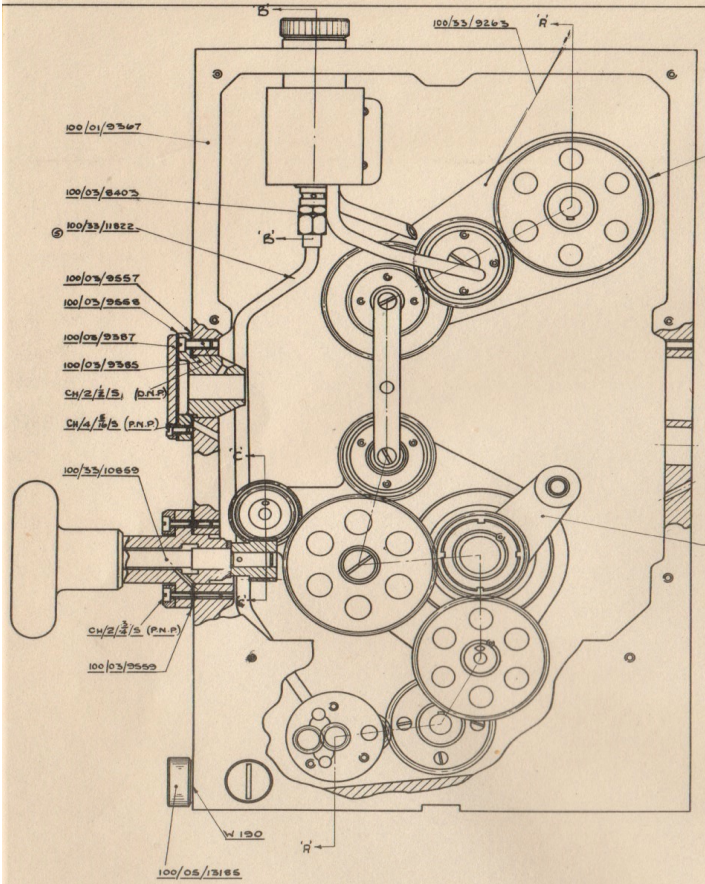

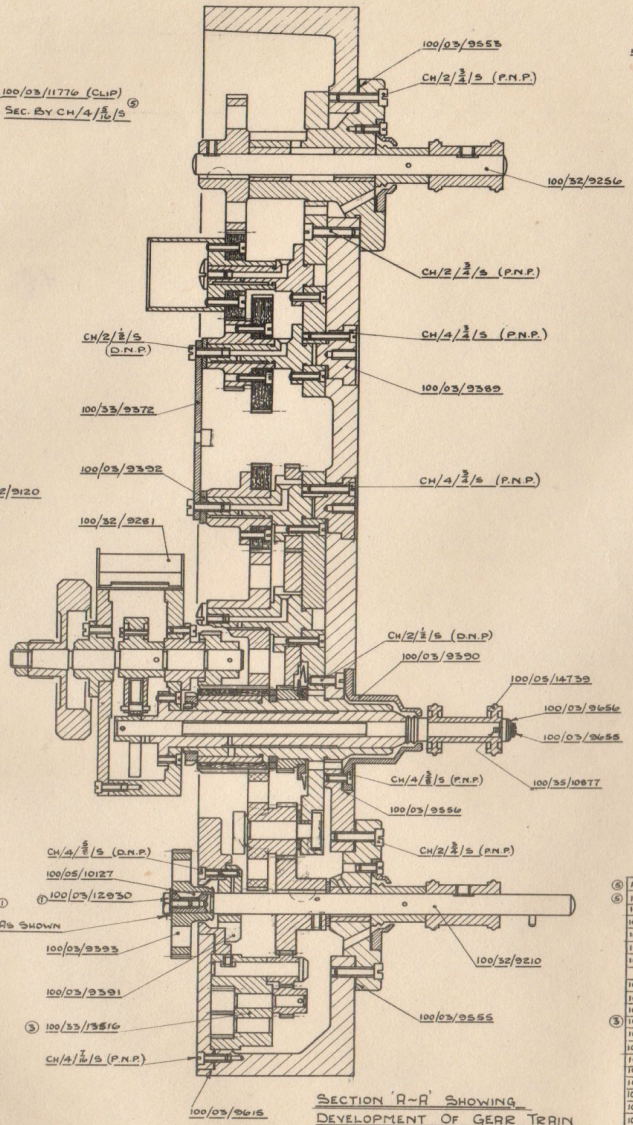

SECTION 'A~A' SHOWING DEVELOPMENT OF GEAR TRAIN

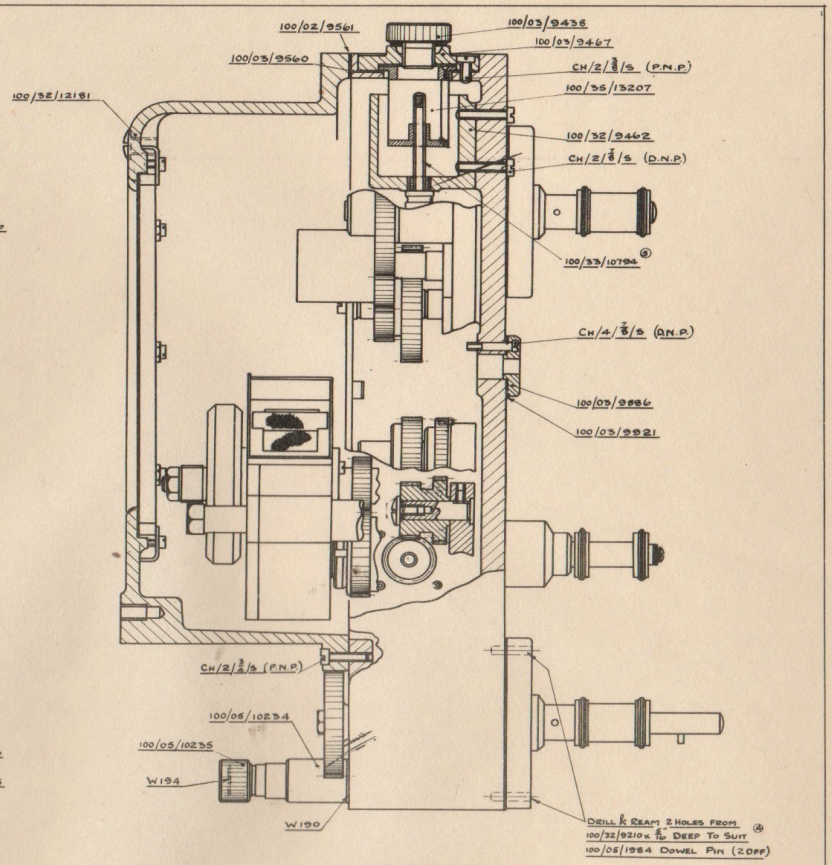

VIEW SHOWING SECTIONS AT 'B~B' & 'C~C'

FOR COMP Nº 21 GEARING & MECH. SEE 100/31/10796
" " Nº 20 " " " 100/31/10797
" " Nº 19 " " " 100/31/12540

CODE	Nº OFF	DESCRIPTION
⑥ 100/33/11822	1	COMP OIL FEED PIPE
⑤ 100/33/10794	1	" " SIGHT PIPE
100/32/9120	1	COMP. INTER GEAR YOKE
100/32/9210	1	" BTM. SPKT UNIT
100/32/9256	1	" TOP " "
100/32/9281	1	" INTER UNIT
100/32/9462	1	" OIL RES^{R} & PIPES
100/32/12181	1	COMP REAR COVER
100/33/9262	1	" TOP GEAR YOKE
100/33/9372	1	" STRAP & KEY
③ 100/33/13516	1	" OIL FEED PUMP
100/33/10869	1	" MASKING KNOB
100/35/10877	1	" KEY WASHER
100/35/13207	1	" OIL FILTER
100/01/9367	1	MAIN FRAME
100/02/9561	1	OIL SEAL FOR MAIN FRAME
100/03/9403	1	UNION NUT
100/03/9385	1	SHTR SHAFT FRONT BRG
100/03/9387	1	" " COVER PLATE
100/03/9389	2	LOCATING PLUGS
100/03/9390	1	OIL DEFLECTOR
100/03/9391	1	BTM. SPKT REAR BRG
100/03/9392	1	WASHER FOR STRAP
100/03/9393	1	MAIN DRIVING GEAR
100/03/9438	1	FILLER PLUG
100/03/9467	1	" ADAPTOR
100/03/9553	1	OIL SEAL FOR TOP SPKT
100/03/9555	1	" " " BTM SPK^{T} FRONT
100/03/9556	1	" " " OIL DEFLECTOR
100/03/9557	1	" " " FRONT SHT^{R} BRG
100/03/9558	1	" " " COVER PLATE
100/03/9559	1	" " " MASK^{G} KNOB
100/03/9560	1	" " " OIL FILLER
100/03/9615	1	" " " PUMP FLANGE
100/03/9655	1	SCREW SEC. SPROCKET
100/03/9656	1	WASHER FOR " "
100/03/9886	1	GOVERNOR SPDL SLEEVE
100/03/9921	1	OIL SEAL FOR SHT^{R} LINK
100/05/10127	1	KEY FOR GEAR
100/05/10234	1	OIL DRAIN
100/05/10235	1	" " PLUG
100/05/14637 ①	1	CLIP FOR OIL FEED PIPE ⑤
100/05/14739	1	INTERMITTENT SPROCKET
100/03/12930	1	RETAINING SCREW ①
100/05/13165	1	OIL FILLER PLUG
100/05/14637	1	LOCK WASHER ①
CH/2/5/16/S	2	SCREW SEC. OIL RESERVOIR
CH/2/5/16/S	26	" " YOKE, BRGS. ETC.
CH/2/5/16/S	9	" " BRGS. STRAP "
CH/2/5/16/S	3	" " FILLER ADPT^{R}
CH/4/5/16/S	3	" " GOVERNOR SLEEVE
CH/4/5/16/S	6	" " LOCATING PLUG
CH/4/5/16/S	3	" " SPROCKET BRG.
CH/4/5/16/S	3	" " OIL PUMP
CH/4/5/16/S	4	" " DEFLECTOR
CH/4/5/16/S	5	" " COVER PLATE ETC ⑤
W 190	2	OIL FILLER PLUG PACKING
W 194	1	" DRAIN WASHER
100/05/1984 ⑤	2	DOWEL PIN FOR BTM SPKT BRG

SCALE :- FULL SIZE

ISSUE Nº	1	2	3	4	5
H. NT. Nº	5311	5380	5566	5975	6007
DATE & SIG	13.5.48 DS	8/6/48 DS	1.9.48 DS	3.2.49 DS	11.2.49 DS

GEARING DETAILS (COMMON TO 19, 20 & 21 MECHANISMS).

MATERIAL	PATT Nº	FINISH	REQ^{D} ON 100/31/10796 100/31/12540 100/31/10794		TRACED	DATE 14-6-48
					CHECKED	9.7.5.
					DRAWN	

100/31/12800/1

GEARING DETAILS

G.K. 19 and 20

Drawing No. 100/31/12800/1

Details	Part No.
Complete Oil Feed Pipe	100/33/11822
Complete Oil Sight Pipe	100/33/10794
Complete Inter Gear Yoke	100/32/9120
Complete Bottom Sprocket Unit	100/32/9210
Complete Top Sprocket Unit	100/32/9256
Complete Inter Unit	100/32/9281
Complete Oil Reservoir and Pipes	100/32/9462
Complete Rear Cover	100/32/12181
Complete Top Gear Yoke	100/33/9263
Complete Strap and Key	100/33/9372
Complete Oil Feed Pump	100/33/13516
Complete Masking Knob	100/33/10859
Complete Key Washer	100/35/10877
Complete Oil Filter	100/35/13207
Main Frame	100/01/9367
Oil Seal for Main Frame	100/02/9561
Union Nut	100/03/8403
Shutter Shaft Front Bearing	100/03/9385
Shutter Shaft Cover Plate	100/03/9387
Locating Plugs	100/03/9389
Oil Deflector	100/03/9390
Clip for Oil Feed Pipe	100/03/11776
Bottom Sprocket Rear Bearing	100/03/9391
Washer for Strap	100/03/9392
Main Driving Gear	100/03/9393
Filler Plug	100/03/9438
Filler Plug Adapter	100/03/9467
Oil Seal for Top Sprocket	100/03/9553
Oil Seal for Bottom Sprocket Front	100/03/9555
Oil Seal for Oil Deflector	100/03/9556
Oil Seal for Front Shutter Bearing	100/03/9557
Oil Seal for Cover Plate	100/03/9558
Oil Seal for Masking Knob	100/03/9559
Oil Seal for Oil Filler	100/03/9560
Oil Seal for Pump Flange	100/03/9615
Screw Securing Sprocket	100/03/9655
Washer for Sprocket	100/03/9656
Governor Spindle Sleeve	100/03/9886
Oil Seal for Shutter Link	100/03/9921
Key for Gear	100/05/10127
Oil Drain	100/05/10234
Oil Drain Plug	100/05/10235
Intermittent Sprocket	100/05/14739
Retaining Screw	100/03/12930
Oil Filler Plug	100/05/13185
Lock Washer	100/05/14637
Screw Securing Oil Reservoir	CH/2/1/8/S
Screw Securing Yoke Bearings etc.	CH/2/3/4/S
Screw Securing Bearings, Strap etc.	CH/2/1/2/S
Screw Securing Filler Adapter	CH/2/3/8/S
Screw Securing Governor Sleeve	CH/4/7/8/S
Screw Securing Locating Plug	CH/4/3/4/S
Screw Securing Sprocket Bearing	CH/4/5/8/S
Screw Securing Oil Pump	CH/4/7/16/S
Screw Securing Deflector	CH/4/3/8/S
Screw Securing Cover Plate etc.	CH/4/5/16/S
Oil Filler Plug Packing	W.190
Oil Drain Washer	W.194
Dowel Pin for Bottom Sprocket Bearing	100/05/1984

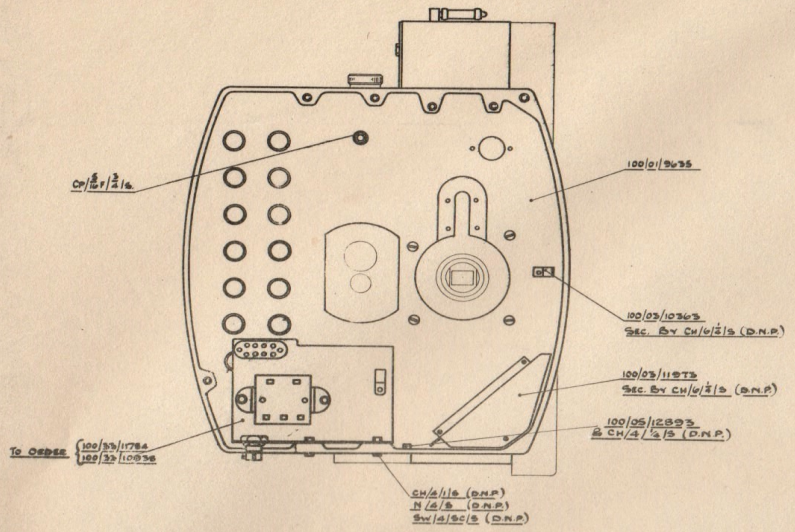

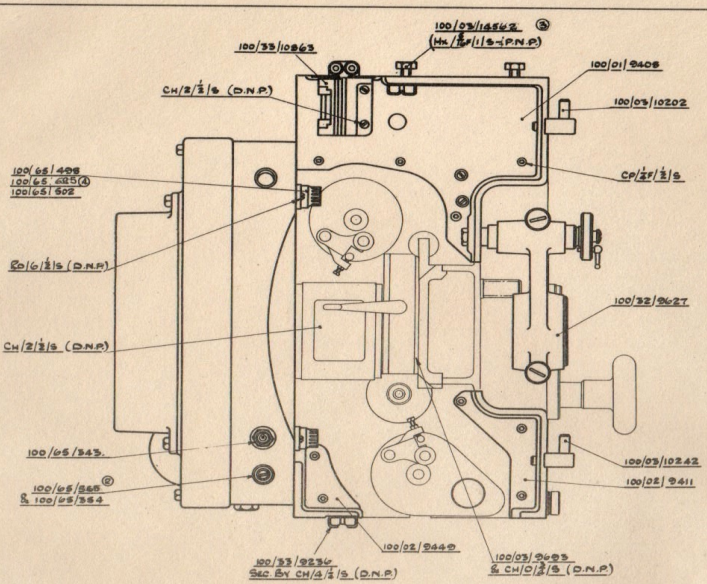

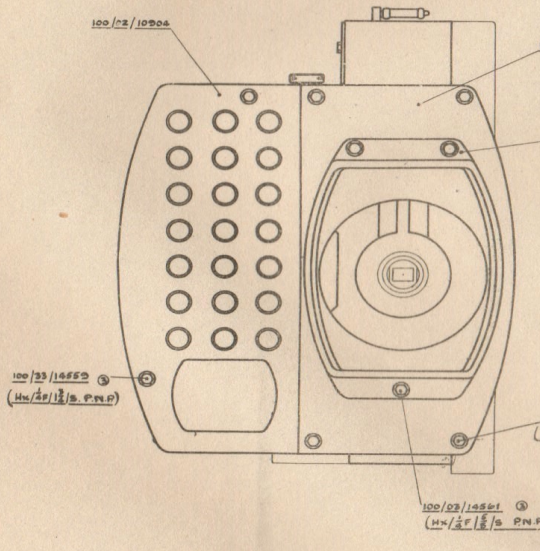

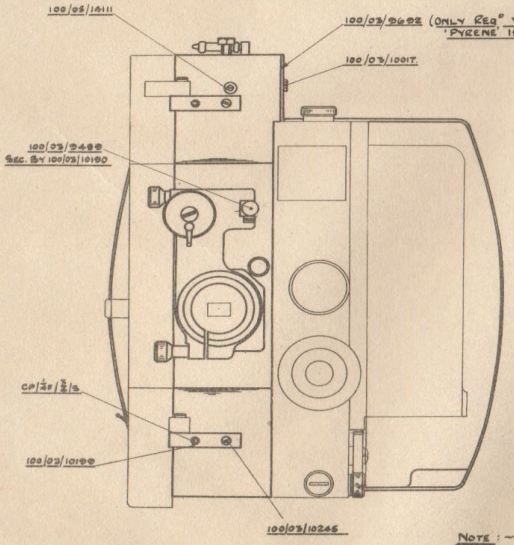

NOTE :- FOR COMP. N°21 MECHANISM SEE 100/31/10796
" " N°20 " " 100/31/10797
" " N°19 " " 100/31/12540

CODE	No OFF	DESCRIPTION
100/32/9627	1	COMP LENS HOLDER
100/33/9236	2	" DOOR CATCH
100/33/10565	1	" FILM TRAP
100/33/11544	1	SILVER SCREEN 7'6" x 6'6" (SQ CORNERS)
100/33/12146	1	" (RD ")
100/33/11784	1	COMP TRANS. BRKT (50 CYCLES)
100/33/10933	1	" " " (25 ")
100/01/9408	1	TOP FRAME EXTENSION
100/01/9635	1	SHUTTER CAGE
100/02/10904	1	" COVER L.H
100/02/9411	1	BOTTOM R.H. EXTENSION
100/02/9440	1	" L.H.
100/02/9637	1	SHUTTER COVER R.H
100/02/9647	1	CONE FOR SHUTTER COVER
100/03/9229	4	MASK PLATE (SQ CORNERS)
100/03/10745	1	" " (RD ")
100/03/11991	1	KEYSTONE BLANK MASK PLATE
100/03/9488	1	LENS GUIDE ROD
100/03/9602	1	COVER PLATE (TO ORDER)
100/03/9603	2	DOWEL
100/03/10017	2	SCREW SEC. COVER PLATE
100/03/10190	1	NUT SEC. GUIDE ROD
100/03/10245	2	SCREW SEC. HINGES
100/03/10199	2	BODY HINGE
100/03/10202	1	TOP HINGE PIN
100/03/10203	1	BOTTOM " "
100/03/10363	1	CABLE CLIP
100/03/11975	1	WIRING COVER
100/65/343	1	LAMP SWITCH
100/65/685	1	FUSE ②
100/65/364	1	PANEL FUSE HOLDER
100/65/602	2	LAMPHOLDER N°1
④ 100/65/625	2	THREADING LAMP
100/65/408	2	SKIRAL
100/05/12893	1	CABLE CLIP
100/05/14111	1	RUBBER STOP
③ 100/03/14562	4	SCREW SEC. R.H. COVER
③ 100/03/14552	2	" " L.H. "
③ 100/03/14561	3	" " CONE
③ 100/03/14560	2	" " TOP BOX
M/4/S	2	NUT SEC TRANSFORMER BRKT
SW/6/SC/S	2	WASHER " " "
CP/⅜F/½/S	2	SCREW SEC. SHTR CAGE
CP/¼F/½/S	2	" " HINGES
CP/⅜F/½/S	9	" " EXTENSIONS
CH/0/2½/S	2	" " GATE BRKT
CH/6/1½/S	6	" " LIGHT COVER
CH/2/½/S	2	" " FILM TRAP
CH/4/1½/6	2	" " TRANSF.R BRKT
CH/4/2½/6	5	" " DOOR CATCH & CLIP
CH/6/½/S	5	" " COVER, STOP & CLIP
RD/6/2½/S	4	" " LAMPHOLDER

S. N°	1	2	3	4
Dwg. No.	5380	8645	5878	6098
Date	777	23-10-48	31-12-48	12-10-48

COMP. PROJECTOR MECHANISM ~ COMMON TO 19, 20 & 21 OUTFITS

MATERIAL	PATT N°	FINISH	Date of Orn	Traced	Date 29-4-49
			100/31/10796 100/31/10797 100/31/12540		100/31/12800/2

COMPLETE PROJECTOR MECHANISM

G.K. 19 and 20

Drawing No. 100/31/12800/2

Details	Part No.
Complete Lens Holder	100/32/9627
Complete Door Catch	100/33/9236
Complete Film Trap	100/33/10863
Velvet Carrier for Mask Plate (Sq. Corners)	100/33/11544
Velvet Carrier for Mask Plate (Rd. Corners)	100/33/12145
Complete Transformer Bracket (50 cycles)	100/33/11784
Complete Transformer Bracket (25 cycles)	100/33/10933
Top Frame Extension	100/01/9408
Shutter Case	100/01/9635
Shutter Cover L.H.	100/02/10904
Bottom R.H.Extension	100/02/9411
Bottom L.H. Extension	100/02/9449
Shutter Cover R.H.	100/02/9637
Cone for Shutter Cover	100/02/9647
Mask Plate (Sq. Corners)	100/03/9929
Mask Plate (Rd. Corners)	100/03/10745
Keystone Blank Mask Plate	100/03/11991
Lens Guide Rod	100/03/9489
Cover Plate (To Order)	100/03/9692
Dowel	100/03/9693
Screw Securing Cover Plate	100/03/10017
Nut Securing Guide Rod	100/03/10190
Screw Securing Hinges	100/03/10245
Body Hinge	100/03/10199
Top Hinge Pin	100/03/10202
Bottom Hinge Pin	100/03/10242
Cable Clip	100/03/10363
Wiring Cover	100/03/11973
Lamp Switch	100/65/343
Fuse	100/65/565
Panel Fuse Holder	100/65/384
Lampholder No.1	100/65/502
Threading Lamp	100/65/625
Bezel	100/65/498
Cable Clip	100/05/12893
Rubber Stop	100/05/14111
Screw Securing R.H.Cover	100/03/14560
Screw Securing L.H.Cover	100/03/14559
Screw Securing Cone	100/03/14561
Screw Securing Top Box	100/03/14562
Nut Securing Transformer Bracket	N/4/S
Washer Securing Transformer Bracket	SW/4/SC/S
Screw Securing Shutter Case	CP/5/16F/3/4/S
Screw Securing Hinges	CP/1/4F/3/4/S
Screw Securing Extensions	CP/1/4F/1/2/S
Screw Securing Gate Bracket	CH/0/3/4/S
Screw Securing Light Cone	CH/2/1/2/S
Screw Securing Film Trap	CH/2/1/4/S
Screw Securing Transformer Bracket	CH/4/1/S
Screw Securing Door Catch and Clip	CH/4/1/4/S
Screw Securing Cover, Stop and Clip	CH/6/1/4/S
Screw Securing Lampholder	RD/6/1/4/S

SUBJECT TO D. 350 FOR LIMITS.

A. KERSHAW & SONS LTD. LEEDS.

B

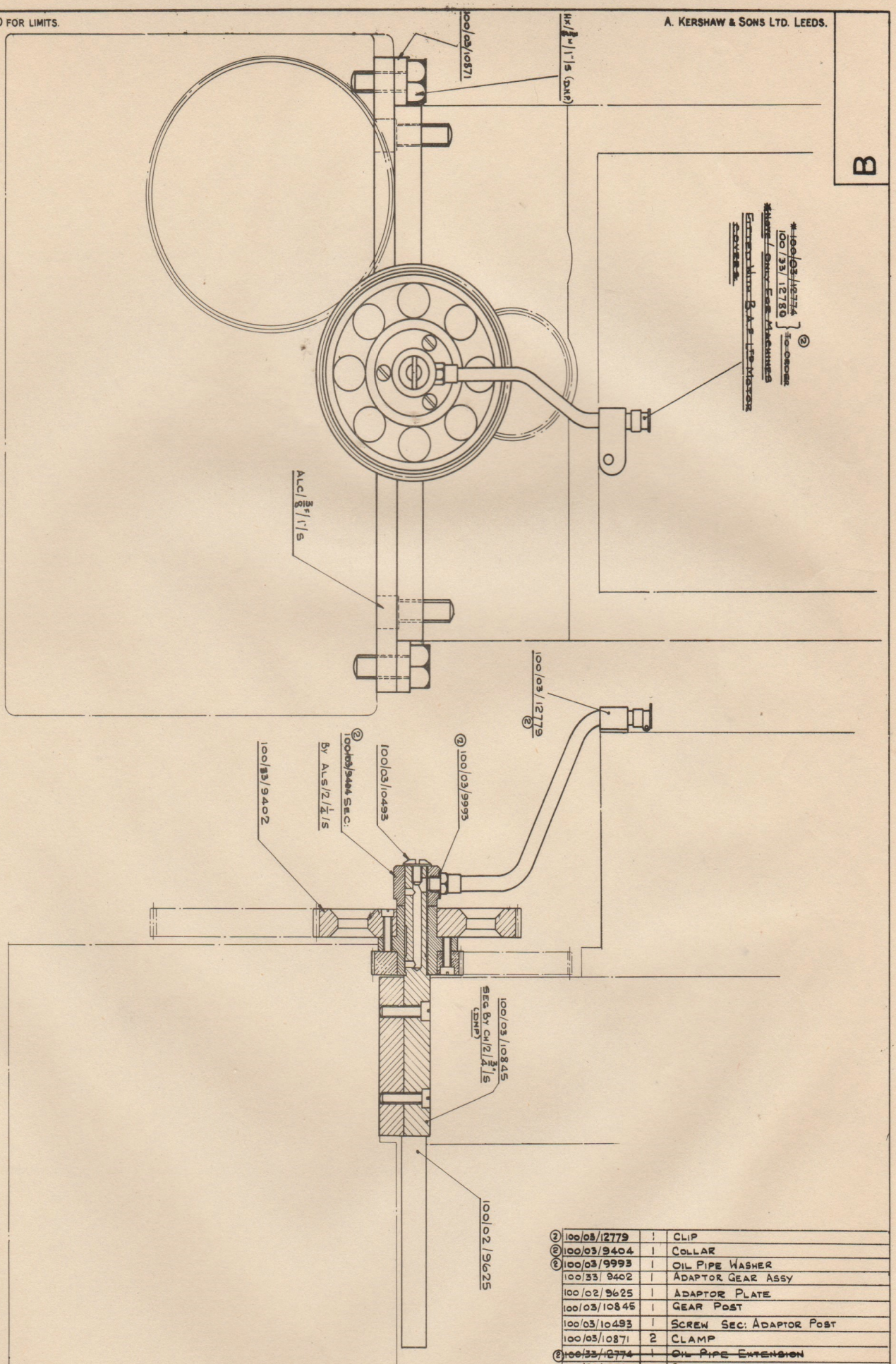

SUPERSEDED BY CB13225
SUBJECT TO CHANGE NOTE 5473
TO TAKE EFFECT ON OCT. 1ST 1948

2	5469	7.7.48	GER.
1	5310	15.5.48.	GER

MODIFICATIONS

SCALE:- FULL SIZE

Code	No off	Description
② 100/03/12779	1	CLIP
② 100/03/9404	1	COLLAR
② 100/03/9993	1	OIL PIPE WASHER
100/33/9402	1	ADAPTOR GEAR ASSY
100/02/9625	1	ADAPTOR PLATE
100/03/10845	1	GEAR POST
100/03/10493	1	SCREW SEC: ADAPTOR POST
100/03/10871	2	CLAMP
② ~~100/33/12774~~	1	~~OIL PIPE EXTENSION~~
100/33/12780	1	COMP. OIL PIPE
AL/2/1/4/S	1	SCREW SEC. COLLAR
ALC/3/8F/1/S	4	" " MECH.
Hx/3/8W/1/S	4	" " ADAPTATIONS
CH/2/3/4/S	2	" " GEAR POST

MATERIAL	PER 100	FINISH	REQD ON	100/31/11862			TRACED	13.5.48.
			100/31/11861				CHECKED	
							DRAWN GE.R.	

B.A.F. 83 TO CINE 19, 20, & 21.

100/32/9401

ADAPTER GEARING

Drawing No. 100/32/9401

Details	Part No.
Clip	100/03/12779
Collar	100/03/9404
Oil Pipe Washer	100/03/9993
Adapter Gear Assembly	100/33/9402
Adapter Plate	100/02/9625
Gear Post	100/03/10845
Screw Securing Adapter Post	100/03/10493
Clamp	100/03/10871
Complete Oil Pipe	100/33/12780
Screw Securing Collar	AL/2/1/4/S
Screw Securing Mechanism	ALC/3/8/F/1/S
Screw Securing Adaptations	HX/3/8W/1/S
Screw Securing Gear Post	CH/2/3/4/S

SUBJECT TO D. 350 FOR LIMITS.

A. KERSHAW & SONS LTD. LEEDS.

B

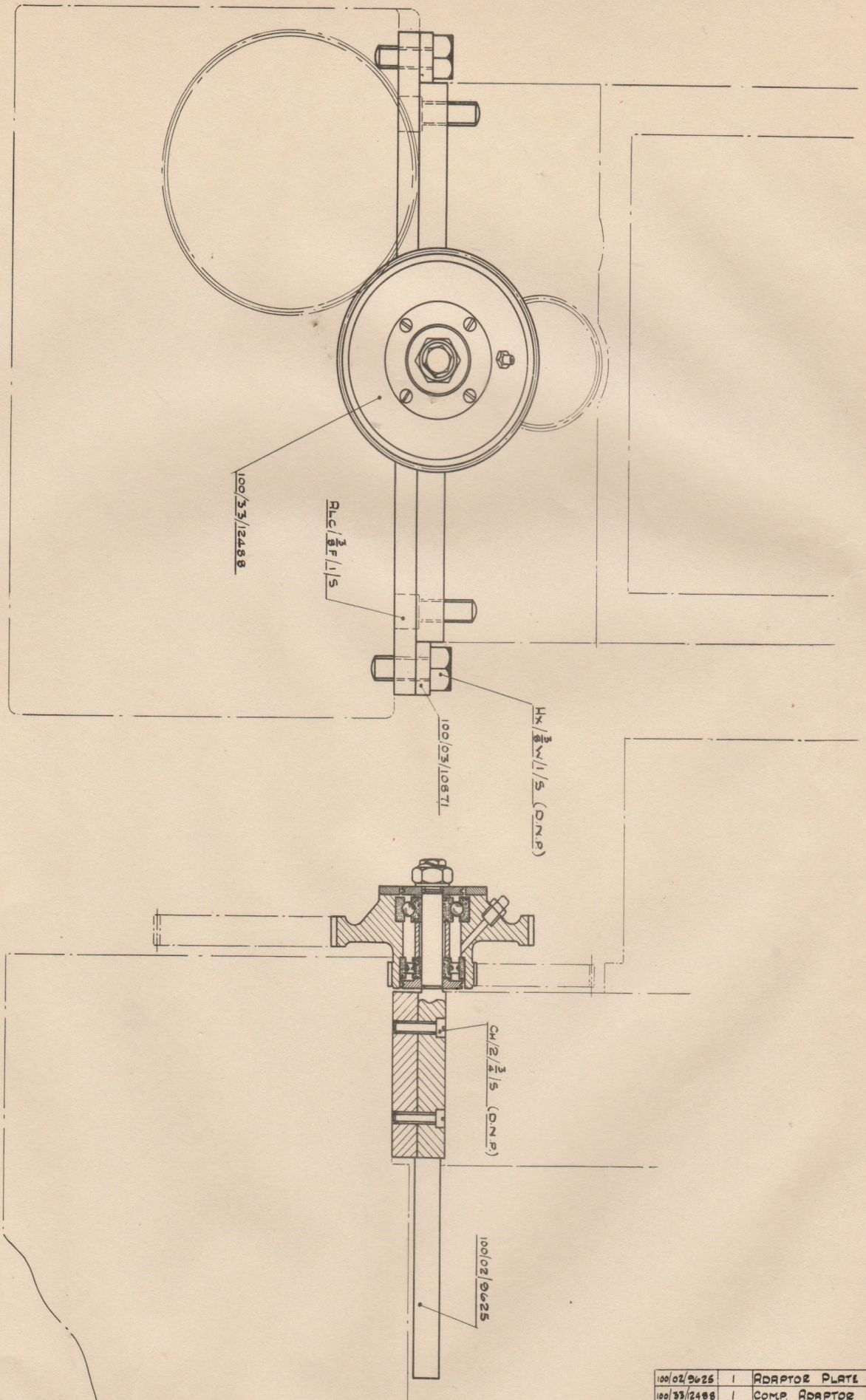

100/02/9625	1	ADAPTOR PLATE
100/33/12488	1	COMP. ADAPTOR POST
100/03/10871	2	CLAMP
ALC/3/8F/1/S	4	SCREW SEC. MECH
CW/2/3/4/S	2	" " ADAPTOR POST
HK/3/8W/1/S	4	" " " PLATE
CODE	N°OFF	DESCRIPTION

MODIFICATIONS | SCALE:-

MATERIAL	PER 100	FINISH	REQD ON	TRACED	DW.	7.7.48
			100/31/11861	CHECKED		100/32/13225
			100/31/11862	DRAWN	GBR	

BRF 83 S/H TO CINE 19, 20 & 21, MARK II

ADAPTER GEARING

Drawing No. 100/32/13225

Details	Part No.
Adapter Plate	100/02/9625
Complete Adapter Post	100/33/12488
Clamp	100/03/10871
Screw Securing Mechanism	ALC/3/8F/1/S
Screw Securing Adapter Post	CH/2/¾/S
Screw Securing Adapter Plate	HX/3/8W/1/S

THE GAUMONT KALEE PRESIDENT ARC LAMP

The lamp is designed for modern High Intensity carbons and has flexibility to cover the full range of manufacturers' recommended carbon-current combinations with capacity to take an 18" carbon and a full 10" positive feed.

Its specified 14" dia. elliptical mirror of optimum collection angle assures outstanding optical efficiency. Critical backlash-free levelling adjustments together with micrometer mirror focussing make it easy to adjust the light spot for maximum screen illumination with even light distribution and absence of colour, while carbon guides situated near the arc and free locating carbon grips assure maintenance of good crater formation, and hence sustained performance.

A notable feature of the lamp and largely contributory to the simplicity and reliability of its operation is the employment of twin feed motors. The positive and negative carbon feeds are quite independant and each powered by its own separately controlled motor, each drive being direct and continuous through a positive reduction gear box. This simple and logical arrangement avoids the complication and weakness of variable ratio mechanisms. Operation of one does not disturb the other. Further, the continuous feed results in maintained uniformity of screen illumination in contrast to the periodic pulsation characteristic of an intermittently fed carbon.

Hand controls on the operating side provide for fine adjustment of carbon position and also for rapid re-setting for a new trim, making it unnecessary for the operator to reach inside the lamp to disengage quick release levers and to handle hot carbon carriages. An external scale shows at a glance the length of run remaining.

The lamphouse doors on each side are full width and open high for easy access and are held in the open position by safety catches which lock automatically in the open position, but are manually but readily released for closing. Each door is fitted with a large inspection window and these, along with the window fitted in the rear panel allow for complete visual inspection of the arc.

The lamphouse chimney is tilted at 15° allowing for easy connection of vents at all operating rakes. A periscope throws a very clear and enlarged image of the arc on to a screen at the base of the chimney, on the operating side.

THE GAUMONT KALEE PRESIDENT ARC LAMP

Carbon Drive

Each carbon is directly and continuously driven from its own variable speed D.C. motor through a totally enclosed reduction gear box. Each motor speed is independently controlled by means of rheostats mounted on the rear panel and the motor circuit includes fuses and an "on-off" switch controlling both motors. The speed variation covers the full range of carbon manufacturers recommended high intensity burning combinations.

Each positively driven constantly rotating feed screw meshes with a worm wheel keyed to a shaft carried in its corresponding carbon carriage and extended to a hand knob outside the lamp. Each shaft is held against rotation by a dual friction clutch. While so held the worm wheel is engaged as a nut by the rotating feed screw which thus traverses the carbon. Turning the knob by hand overcomes the grip of the clutch and rotates the worm wheel, which, working into the lead screw like a rack, provides a simple sensitive hand feed and also rapid traverse for re-setting.

Striker

A sensitive scissors type striker is fitted towards the front end on the operating side.

NOTE: Do not "Crash" the carbons together when striking, or the positive crater will be damaged and the carbons possibly jump out of their crutches.

Mirror Adjustment

The mirror is carried in a precising 3-point suspension in which it is retained by a single spring loaded catch. Sensitive backlash-free micrometer levelling adjustments are provided, operated by knobs on the rear panel, together with a micrometer focus adjustment, also operated from the back of the lamp.

Mirror Screen and Dowser

These are linked together and can be operated from either side of the lamp. The mechanism is simple and robust without springs or complicated linkages and provides a two piece mirror screen which completely encircles the negative carbon, thus fully protecting the mirror from splashes during striking.

Carbon Guides

Both carbons are guided near the crater by renewable heat resistant crutches. The positive guide is set at the factory to accommodate an 8 m/m carbon and incorporates a chute leading to a removable ash tray. The negative guide is adjustable both vertically and horizontally for accurate carbon alignment by micrometer control knobs on the rear panel. An inspection window is also incorporated in the rear panel for visual checking of the alignment.

Carbon Grips

These are of heat resistant material, of simple effective screw clamp type, to accept any carbon size. Their insulated clamping knobs are placed out of the glare of the lamp and remain cool to handle. Both grips are self aligning to the carbon guides.

Arc Image

A periscope throws an enlarged image of the arc on to a screen on the operating side of the lamp at the base of the chimney. The correct crater position is with the end of the positive carbon set at 5" from back of the centre of the mirror and the periscope is set at the factory corresponding to this, when the mirror is in the mean focussing position. Further adjustment should not be necessary but the position of the image on the screen can be controlled by turning and, if necessary, tilting the reflector which is carried by the periscope.

Interior Illumination

A lamp holder for standard mains voltage lamp is mounted in the lamphouse roof. An operating switch is incorporated in the rear panel.

Electrical

All wiring is brought to a terminal panel in the rear of the lamp, accessible by removing a readily detachable cover plate. A detachable entry panel caters for variation in conduit fitting.

The rear panel which carries the motor control rheostats, motor fuses along with switch and associated wiring, and also switch and wiring for the internal inspection lamp, is readily detachable as a unit to give easy access to this wiring and also to the lamp mechanism. The fuses are of standard "Cartridge" type.

OPERATING AND MAINTENANCE

Installation

Remove the detachable cover beneath the rear panel, thus exposing the terminal panel. Connect the arc leads to the specified terminals and A.C. leads for inspection lamp to the terminal block.

N.B. All internal wiring runs from this panel and the motor leads are connected across the main arc feed points.

Set each motor potentiometer to correspond to the carbon feed, i.e., maintaining position of the image of the carbon tips on the screen and adjust negative crutch to maintain correct positive crater formation.

Level the mirror obtaining an even screen and finally focus the mirror by means of the knob on the rear of the lamp to obtain optimum screen illumination.

NOTE: Do not "Crash" the carbons together when striking, or the positive crater will be damaged and the carbons possibly jump out of their crutches.

Lubrication

Oil sparingly and daily all bearings and guides. Note that the gear box is fitted with oilite bearings and consequently a drop or two of oil daily is quite sufficient.

The carbon carriage clutches should be kept free from oil and periodical cleaning of the friction disc along with metal blades is recommended.

Carbon Carriage Drive Clutches

Undue tightening of the drive clutches merely makes the hand feed movement unnecessarily heavy. The clutches should be sufficiently tight to ensure the carbon carriages being driven at whatever rake the lamp is burning and once these are set should require very little further attention as the clutch only "slips" whilst the carriages are fed by hand.

Removing Motor & Gear Box

Disconnected at the respective terminal block either motor may be removed, complete with the top half of its gear box, by releasing the securing screws at the corners of the unit.

Removing the Mirror

With the mirror dowser fully open, release the spring loaded catch at the top of the mirror support casting, lift the mirror from the bottom support posts and withdraw between the positive and negative crutches, taking care not to scratch the mirror on the positive crutch or foul the periscope barrel. To facilitate removal, the negative crutch should be at the top of its vertical movement, as controlled by the knob on the rear panel.

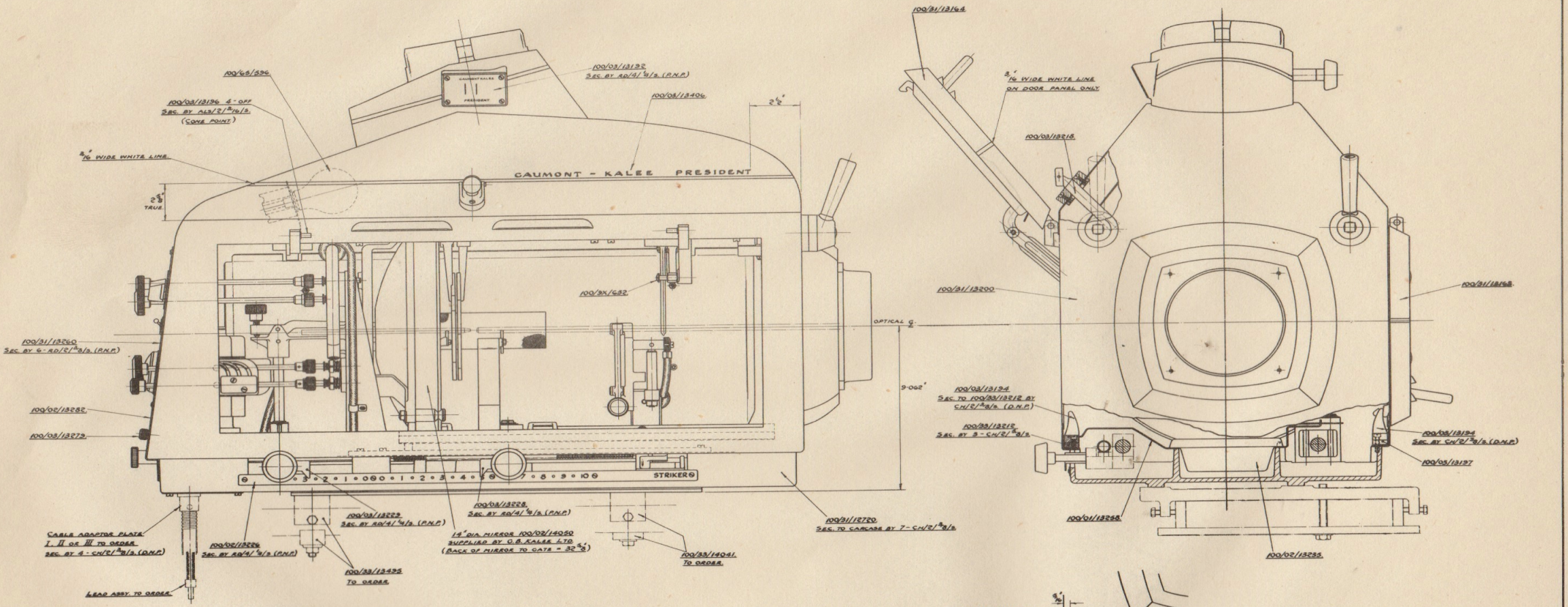

SCHEDULE OF PARTS FOR ADAPTATION TO VARIOUS STANDS (TO ORDER)				
TYPE OF STAND	CABLE ADAPTOR PLATE.	LEAD ASSY.	FEET OR CRADLE.	BOLTS AND NUTS SEC.
OTHER THAN G.K.19, 20 & 21.	TYPE I 100/33/12748	NIL	NIL.	NIL.
G.K.19 OR 20	TYPE II 100/33/12749	100/33/13531	100/03/11117 SUP. WITH STAND.	4-HA/3/8"/1 3/3. (D.N.P.)
G.K.19 OR 20 UNIVERSAL.	TYPE II 100/33/12749	100/33/13532	100/03/12130 SUP. WITH STAND.	SUPPLIED WITH FEET.
G.K. 21.	TYPE III 100/33/13877	100/33/13533	100/03/7802 SUP. WITH STAND.	4-HA/3/8"/1/3. 4-HA/3/8"/3.
N°12 PEDESTAL.	TYPE I 100/33/12748	NIL	100/33/13496 (REAR) 100/33/14041 (FRONT)	SUPPLIED WITH FEET.
G.K.19 OR 20 WITH FULL ARC CONT.	TYPE II 100/33/12749	100/33/13535	100/03/11117 SUP. WITH STAND.	4-HA/3/8"/1/3.

FOR TOOL KIT SEE 100/33/14043
TO BE SUPPLIED ONLY WHEN LAMP IS SUPPLIED WITHOUT STAND OR PROJECTOR.

N.B. ITEMS DENOTED THUS * ARE TO ORDER

100/31/13100	1	ASS. OF DOORS & MECH. & CARCASE	100/02/13235	1	TRAY.	100/45/534	1	INSPECTION LAMP.
100/31/13163	1	COMP. DOOR L.H.	100/02/13226	1	CARBON TRAVEL SCALE.	100/34/482	2	SCREW RAT. SUPPORT LINK.
100/31/13164	1	COMP. DOOR R.H.						
100/31/12720	1	COMP. BURNER MECH.ᴺ	100/03/13132	1	ARC IMAGE SCREEN.			
100/33/13240	1	COMP. REAR CONTROL PANEL.	100/03/13134	2	DOOR CATCH.			
100/33/12748 *	1	CABLE ADAPTOR PLATE I	100/03/13136	4	HINGE PIN.			
100/33/12749 *	1	" " " II	100/03/13137	1	PACKING PIECE.	CN/2/3/8/3.	13	SCREW SEC. CARCASE & CATCH ETC.
100/33/13877 *	1	" " " III	100/03/13218	1	POSITIVE CURSOR.	CN/2/3/3/3.	3	" " ANCHOR STRIP.
100/33/13495 *	1	FOOT ASSY.	100/03/13229	1	NEGATIVE CURSOR.	CN/2/3/3/3.	2	" " L.H. DOOR CATCH.
100/33/14041 *	1	SPECIAL FOOT ASSY.	100/03/13279	2	THUMB SCREW SEC. LOOSE PANEL	RD/2/3/3/3.	6	" " REAR CONTROL PANEL
100/33/13212	1	ASSY. OF ANCHOR STRIP & PED.	100/03/13304	1	SERIAL N° PLATE.	RD/4/3/3.	13	" " CARBON SCALE ETC.
100/33/13218	1	" " PERISCOPE BARREL.	100/03/13406	2	TRANSFER.	RD/8/3/3.	4	" " SERIAL N° PLATE.
100/33/14043	1	TOOL KIT.	100/33/13531 *	1	LEAD ASSY. FOR G.K.19 & 20 STAND.	ALS/2/3/16/3.	4	" " HINGE PIN (CONE POINT)
100/02/14050	1	14" DIA. ELLIPTICAL MIRROR.	100/33/13532 *	1	" " " G.K.19 & 20 U/S.			
100/01/13258	1	BURNER MECH. COVER.	100/33/13533 *	1	" " " G.K. 21. STAND.			
100/02/13282	1	LOOSE PANEL.	100/33/13535 *	1	" " " G.K.19 & 20 FULL CONTROL			
CODE	Nº	DESCRIPTION	CODE	Nº	DESCRIPTION	CODE	Nº	DESCRIPTION.

ISSUE Nº	1			
CH. NT. Nº	5755			
DATE & SIG.	8.10.48 A.J.B.			

COMPLETE 14" PRESIDENT ARCLAMP.

REQ. ON		DRAWN	A.J.B.
STOCK		TRACED	Aly.
		CHECKED	

SCALE 3 : 11 : 48

100/31/12000

COMPLETE 14" PRESIDENT ARC LAMP

Drawing No. 100/31/12000

	Details	Part No.
	Arrangement if Dowser Mechanism and Carcase	100/31/13200
	Complete Door L.H.	100/31/13163
	Complete Door R.H.	100/31/13164
	Complete Burner Mechanism	100/31/12720
	Complete Rear Control Panel	100/31/13260
*	Cable Adapter Plate I	100/33/12748
*	Cable Adaptor Plate II	100/33/12749
*	Cable Adaptor Plate III	100/33/13877
*	Foot Assembly	100/33/13495
*	Special Foot Assembly	100/33/14041
	Assembly of Anchor Strip and Peg	100/33/13212
	Assembly of Periscope Barrel	100/33/13218
	Tool Kit	100/33/14043
	14" Dia. Elliptical Mirror	100/02/14050
	Burner Mechanism Cover	100/01/13258
	Loose Panel	100/02/13282
	Tray	100/02/13235
	Carbon Travel Scale	100/02/13226
	Arc Image Screen	100/03/13192
	Door Catch	100/03/13194
	Hinge Pin	100/03/13196
	Packing Piece	100/03/13197
	Positive Cursor	100/03/13228
	Negative Cursor	100/03/13229
	Thumb Screw Securing Loose Panel	100/03/13279
	Serial No. Plate	100/03/13304
	Transfer	100/03/13406
*	Lead Assembly for G.K. 19 & 20 STAND	100/33/13531
*	Lead Assembly for G.K. 19 & 20 U/B	100/33/13532
*	Lead Assembly for G.K. 21 Stand	100/33/13533
*	Lead Assembly for G.K. 19 & 20 Full Control	100/33/13535
	Inspection Lamp	100/65/596
	Screw Ret. Support Link	100/9K/632
	Screw Securing Carcase and Catch etc.	CH/2/3/8/S
	Screw Securing Anchor Strip	CH/2/5/8/S
	Screw Securing L.H. Door Catch	CH/2/7/8/S
	Screw Securing Rear Control Panel	RD /2/3/8/S
	Screw Securing Carbon Scale Etc.	RD/4/1/4/S
	Screw Securing Serial No.Plate	RD/8/1/4/S
	Screw Securing Hinge Pin (Cone Point)	ALS/2/3/16/S

N.B. Items Denoted thus * are to order

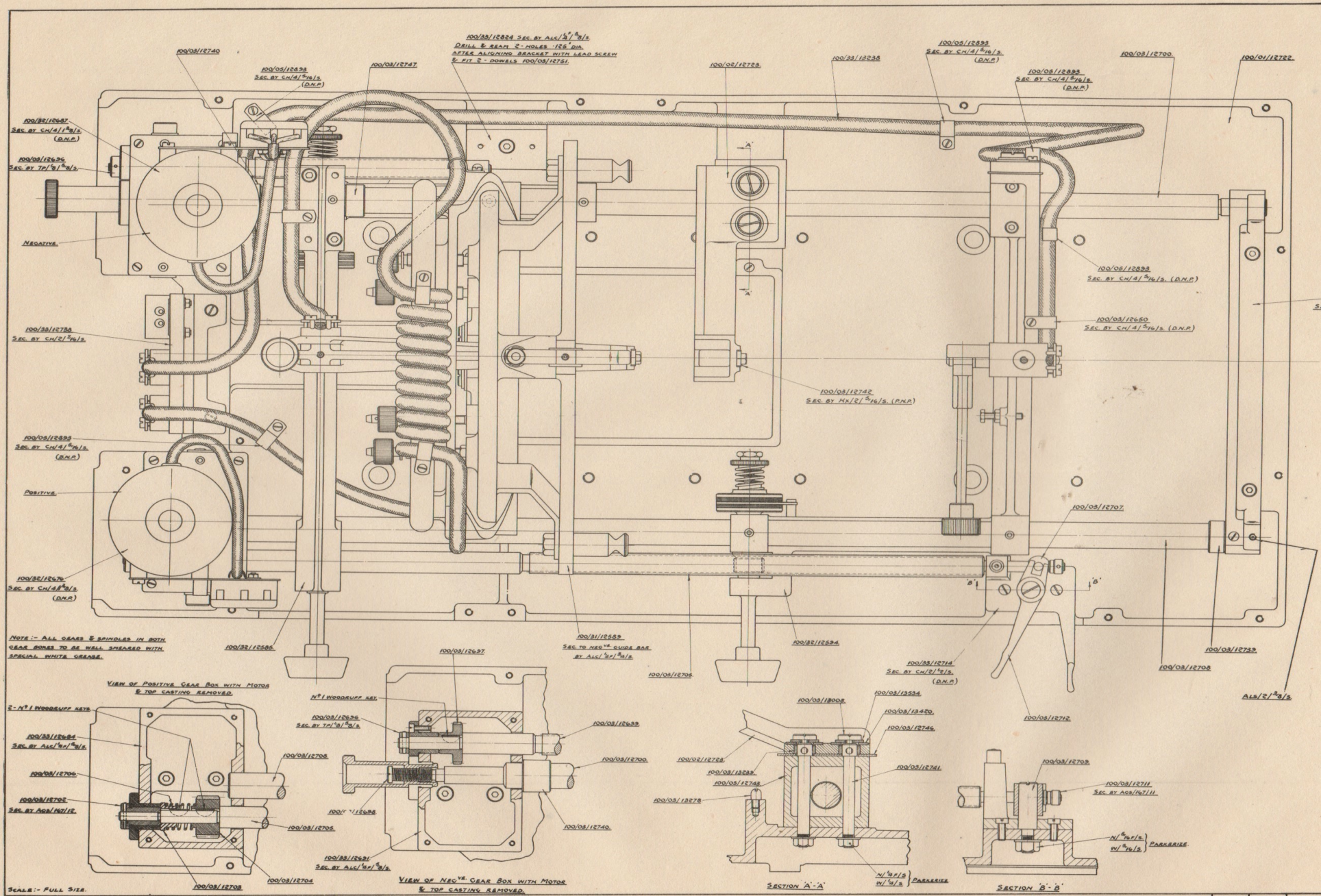

CODE	No	DESCRIPTION
100/32/12585	1	COMP. NEG. CARRIAGE.
100/32/12594	1	" POS. "
100/33/12583	1	" MIRROR HOLDER.
100/32/12687	1	ASSY. OF NEG. GEAR BOX.
100/33/12439	1	" " " " BASE
100/32/12674	1	" " POS. GEAR BOX.
100/33/12684	1	" " " " BASE
100/33/12714	1	" " " LEAD SCREW B
100/33/12738	1	" " TERMINAL BRKT.
100/33/12824	1	" " NEG. LEAD SCREW BR
100/33/13238	1	POS. ARC LEAD.
100/01/12722	1	BASE CASTING. (100/00/8447
100/02/12723	1	POS. CRUTCH ARM (100/00/875
100/02/12724	1	GUIDE BRIDGE. (100/00/875
100/03/13218	2	LOCATING SCREW.
100/03/12733	1	5/16" SPACING COLLAR.
100/03/12740	1	3/8" " "
100/03/12741	2	POS. CRUTCH ARM BOLT.
100/03/12742	1	" " .
100/03/12743	1	" " ARM PACKING.
100/03/12744	1	" " INSULATION.
100/03/12747	1	SPACING COLLAR.
100/03/12694	1	NEG. LEAD SCREW COLLAR.
100/03/12697	1	" " " GEAR.
100/03/12698	1	MIRROR FOCUS STOP SCREW.
100/03/12699	1	NEG. LEAD SCREW.
100/03/12700	1	" GUIDE BAR.
100/03/12702	1	POS. LEAD SCREW BEARING.
100/03/12703	1	SPRING COLLAR.
100/03/12704	1	POS. LEADSCREW GEAR.
100/03/12705	1	" " "
100/03/12706	1	" " SPRING.
100/03/12707	1	" " STRIKE PIVO
100/03/12708	1	" GUIDE BAR.
100/03/12709	1	STRIKER POST.
100/03/12711	1	POS. LEAD SCREW COLLAR.
100/05/12712	1	STRIKE TRIGGER.
100/05/12833	5	CABLE CLIP.
100/03/12460	1	" " .
100/03/12751	2	DOWEL.
100/03/13008	2	POS. CRUTCH SCREW.
100/03/13239	2	INSULATING BUSH.
100/03/13420	2	" WASHER.
100/03/13534	2	SPECIAL STEEL WASHER.
CH/4/3/8/S.	8	SCREW SEC. GEAR BOX TOPS.
CH/2/5/16/S.	2	" " TERMINAL BRKT.
CH/4/5/16/S.	6	" " CABLE CLIP.
CH/2/3/8/S.	2	" " POS. LEAD SCREW
HN/2/5/16/S.	1	" " CRUTCH FORK.
ALC/1/4/8/S.	1	SCREW SEC. MIRROR HOLDER.
AGS/167/12	1	TAPER PIN SEC. POS. LEADSC.VE BR
ALS/2/3/8/S.	1	SCREW SEC. POS.VE GUIDE BAR.
TP/3/5/32/S.	1	TAPER PIN SEC. NEG.VE COLLAR
AGS/167/11	1	" " POS.VE. "
ALC/1/4/8/S.	2	SCREW SEC. GUIDE BRIDGE.
ALC/1/4/8/S.	1	" " NEG. LEAD SCREW BR
ALC/1/4/8/S.	4	" " GEAR BOXES.
N/3/8"/S.	2	NUT SEC. CRUTCH BOLT.
W/3/8/S.	2	WASHER FOR CRUTCH BOLT.
N/5/16"/S.	1	NUT SEC. STRIKER POST.
W/5/16/S.	1	WASHER FOR STRIKER POST.
—	3	No 1 WOODRUFF KEY.

ISSUE No				
CH. NT. No				
DATE & SIG.				

COMPLETE BURNER MECHANISM - 14" PRESIDENT ARCLAMP.

REQ. ON	
10/31/12000	

DRAWN	A.F.B.	18 : 5 : 48
TRACED	B.S.	100/31/12720
CHECKED		

COMPLETE BURNER MECHANISM

14" "PRESIDENT" ARC LAMP

Drawing No. 100/31/12720

Details	Part No.
Complete Negative Carriage	100/32/12585
Complete Positive Carriage	100/32/12594
Complete Mirror Holder	100/31/12589
Assembly of Negative Gear Box	100/32/12687
Assembly of Negative Gear Box Base	100/33/12691
Assembly of Positive Gear Box	100/32/12676
Assembly of Positive Gear Box Base	100/33/12684
Assembly of Positive Lead Screw Bracket	100/33/12714
Assembly of Terminal Bracket	100/33/12738
Assembly of Negative Lead Screw Bracket	100/33/12824
Positive Arc Lead	100/33/13228
Base Casting (100/00/8667)	100/01/12722
Positive Crutch Arm (100/00/8753)	100/02/12723
Guide Bridge (100/00/8738)	100/02/12724
Locating Screw	100/03/13278
7/16" Spacing Collar	100/03/12739
3/4" " "	100/03/12740
Positive Crutch Arm Bolt	100/03/12741
Positive Crutch	100/03/12742
Positive Crutch Arm Packing	100/03/12743
Positive Crutch Insulation	100/03/12746
Spacing Collar	100/03/12747
Negative Lead Screw Collar	100/03/12696
Negative Lead Screw Gear	100/03/12697
Mirror Focus Stop Screw	100/03/12698
Negative Lead Screw	100/03/12699
Negative Guide Bar	100/03/12700
Positive Lead Screw Bearing	100/03/12702
Spring Collar	100/03/12703
Positive Leadscrew Gear	100/03/12704
Positive Leadscrew	100/03/12705
Positive Leadscrew Spring	100/03/12706
Positive Leadscrew Strike Pivot	100/03/12707
Positive Guide Bar	100/03/12708
Striker Post	100/03/12709
Positive Lead Screw Collar	100/03/12711
Strike Trigger	100/03/12712
Cable Clip	100/05/12893
Cable Clip	100/03/12650
Dowel	100/03/12751
Positive Crutch Screw	100/03/13008
Insulating Bush	100/03/13239
Insulating Washer	100/03/13420
Special Steel Washer	100/03/13534
Screw Securing Gear Box Tops	CH/4/1 3/8/S
Screw Securing Terminal Bracket	CH/2/7/16/S
Screw Securing Cable Clip	CH/4/5/16/S
Screw Securing Positive Lead Screw Bt.	CH/2/1/2/S
Screw Securing Crutch Fork	HX/2/5/16/S
Screw Securing Mirror Holder	ALC/¼F/3/4/S
Taper Pin Securing Positive Leadscrew Bearing	AGS/167/12
Screw Securing Positive Guide Bar	PLS/?/3/8/S
Taper Pin Securing Negative Collar	TP/1/8/5/8/S
Taper Pin Securing Positive Collar	AGS/167/11
Screw Securing Guide Bridge	ALC/¼F/3/4/S
Screw Securing Negative Lead Screw Bracket	ALC/¼F/5/8/S
Screw Securing Gear Boxes	ALC/¼F/5/8/S
Nut Securing Crutch Bolt	N/¼F/S
Washer for Crutch Bolt	W/¼/S
Nut Securing Striker Post	N/5/16/F/S
Washer for Striker Post	W/5/16/S
No.1 Woodruff Key	-

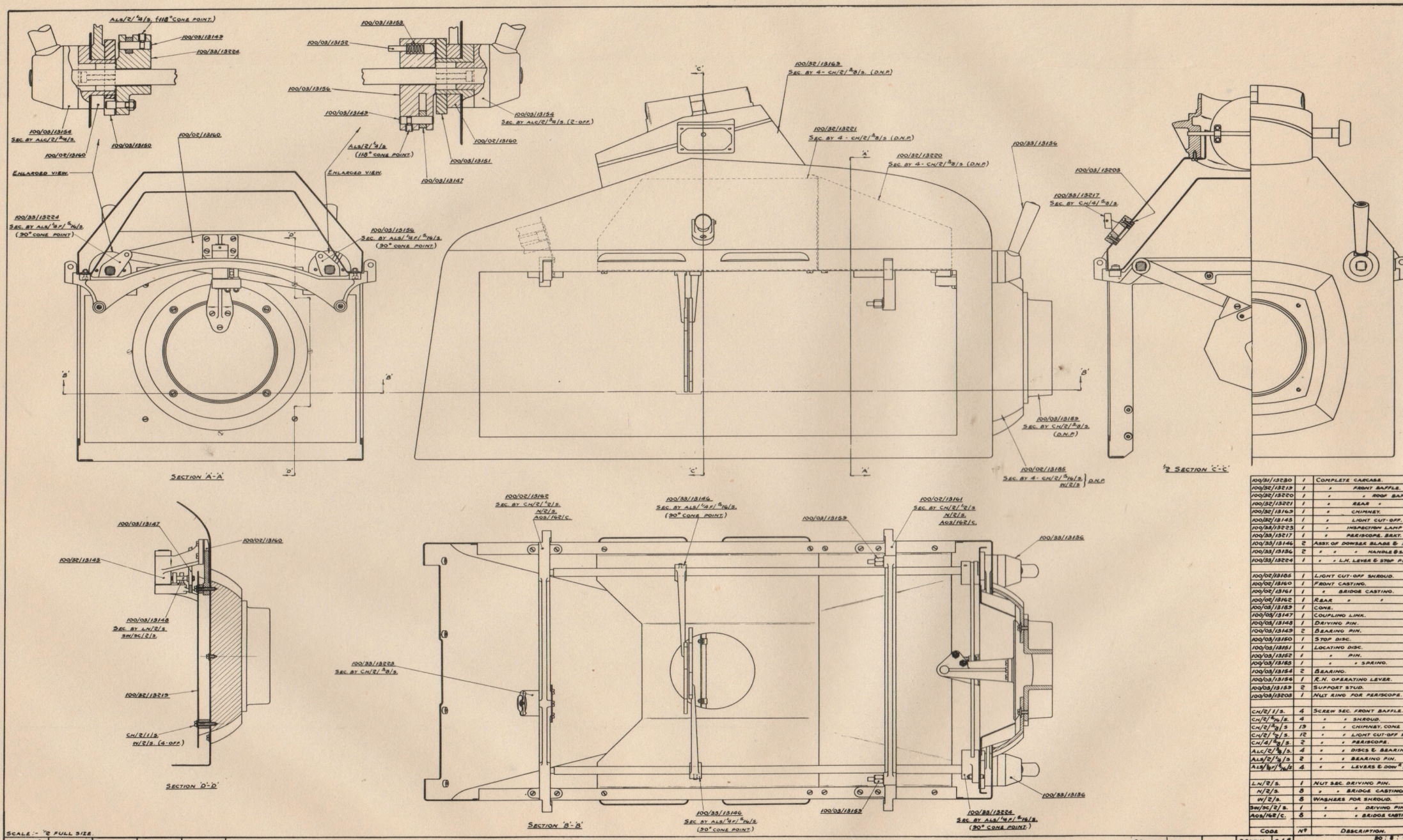

100/31/13230	1	COMPLETE CARCASE.
100/32/13219	1	" FRONT BAFFLE.
100/32/13220	1	" " ROOF BAF
100/32/13221	1	" REAR " "
100/32/13163	1	" CHIMNEY.
100/32/13143	1	" LIGHT CUT-OFF.
100/33/13225	1	" INSPECTION LAMP
100/33/13217	1	" PERISCOPE. BRKT.
100/33/13146	2	ASSY. OF DOWSER BLADE &
100/33/13136	2	" " " HANDLE &
100/33/13224	1	" " L.H. LEVER & STOP P
100/02/13165	1	LIGHT CUT-OFF SHROUD.
100/02/13160	1	FRONT CASTING.
100/02/13161	1	" BRIDGE CASTING.
100/02/13162	1	REAR " "
100/03/13183	1	CONE.
100/03/13147	1	COUPLING LINK.
100/03/13148	1	DRIVING PIN.
100/03/13143	2	BEARING PIN.
100/03/13150	1	STOP DISC.
100/03/13151	1	LOCATING DISC.
100/03/13152	1	" PIN.
100/03/13155	1	" " SPRING.
100/03/13154	2	BEARING.
100/03/13156	1	R.H. OPERATING LEVER.
100/03/13159	2	SUPPORT STUD.
100/03/13208	1	NUT RING FOR PERISCOPE.
CH/2/1/S.	4	SCREW SEC. FRONT BAFFLES.
CH/2/5/16/S.	4	" " SHROUD.
CH/2/3/8/S.	13	" " CHIMNEY. CONE
CH/2/5/S.	12	" " LIGHT CUT-OFF
CH/4/3/8/S.	2	" " PERISCOPE.
ALC/2/3/8/S.	4	" " DISCS & BEARIN
ALS/2/1/4/S	2	" " BEARING PIN.
ALS/1/2 F/5/16/S	4	" " LEVERS & DOW
LN/2/S.	1	NUT SEC. DRIVING PIN.
N/2/S.	8	" " BRIDGE CASTING
W/2/S.	8	WASHERS FOR SHROUD.
SH/SC/2/S.	1	" " DRIVING PIN
AGS/162/C.	8	" " BRIDGE CAST
CODE	Nº	DESCRIPTION.

SCALE :- ½ FULL SIZE.

ISSUE Nº						
CH. NT. Nº						
DATE & SIG.						

ARR.T OF DOWSER MECH.M & CARCASE - 14" PRESIDENT ARCLAMP.

REQ. ON			
100/31/13000			

DRAWN	A.J.B.	100/31/13200
TRACED	B.S.	
CHECKED		

ARRANGEMENT OF DOWSER MECHANISM AND CARCASE

14" "PRESIDENT" ARC LAMP

Drawing No. 100/31/13200

Details	Part No.
Complete Carcase	100/31/13230
Complete Front Baffle	100/32/13219
Complete Front Roof Baffle	100/32/13220
Complete Rear Roof Baffle	100/32/13221
Complete Chimney	100/32/13169
Complete Light Cut-off	100/32/13143
Complete Inspection Lamp Bracket	100/33/13223
Complete Periscope Bracket	100/33/13217
Assembly of Dowser Blade and Arm	100/33/13146
Assembly of Dowser Handle and Shaft	100/33/13136
Assembly of L.H. Lever and Stop Pin	100/33/13224
Light Cut-off Shroud	100/02/13185
Front Casting	100/02/13160
Front Bridge Casting	100/02/13161
Rear Bridge Casting	100/02/13162
Cone	100/03/13189
Coupling Link	100/03/13147
Driving Pin	100/03/13148
Bearing Pin	100/03/13149
Stop Disc	100/03/13150
Locating Disc	100/03/13151
Locating Pin	100/03/13152
Locating Pin Spring	100/03/13153
Bearing	100/03/13154
R.H. Operating Lever	100/03/13156
Support Stud	100/03/13159
Nut Ring for Periscope	100/03/13203
Screw Securing Front Baffle	CH/2/1/S
Screw Securing Shroud	CH/2/5/16/S
Screw Securing Chimney, Cone etc.	CH/2/3/8/S
Screw Securing Light Cut-off etc.	CH/2/1/2/S
Screw Securing Periscope	CH/4/5/8/S
Screw Securing Discs and Bearings	ALC/2/3/4/S
Screw Securing Bearing Pin	ALS/2/1/4/S
Screw Securing Levers and Dowser Arm	ALS/$\frac{1}{4}$F/5/16/S
Nut Securing Driving Pin	LN/2/S
Nut Securing Bridge Casting	N/2/S
Washers for Shroud	W/2/S
Washers for Driving Pin	SW/SC/2/S
Washers for Bridge Casting	AGS/162/C

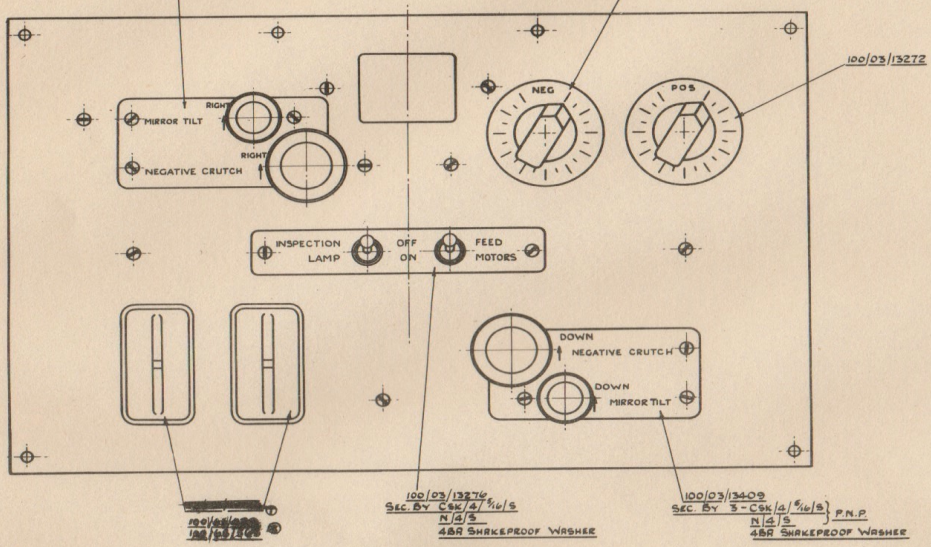

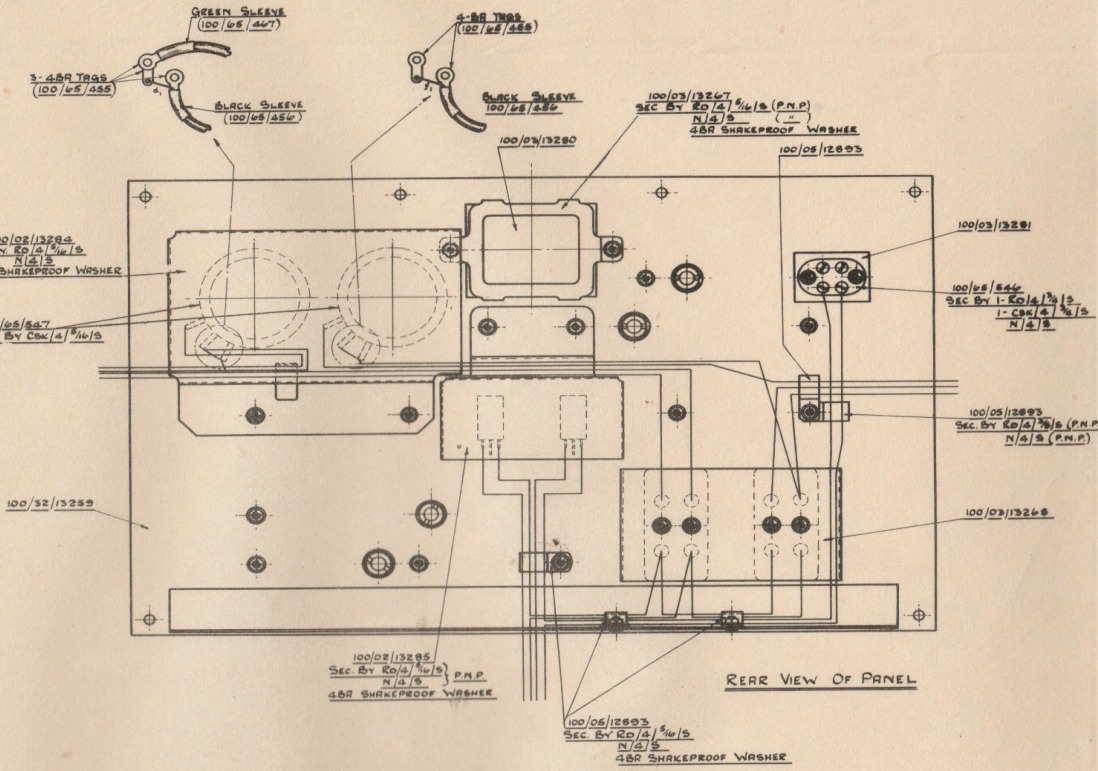

REAR VIEW OF PANEL

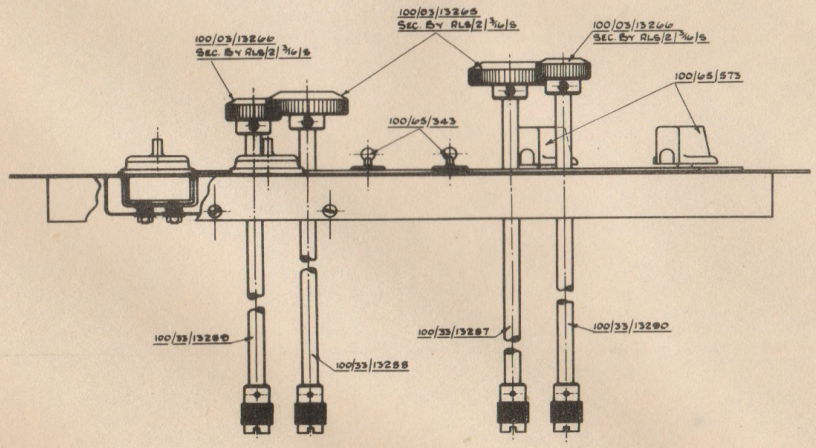

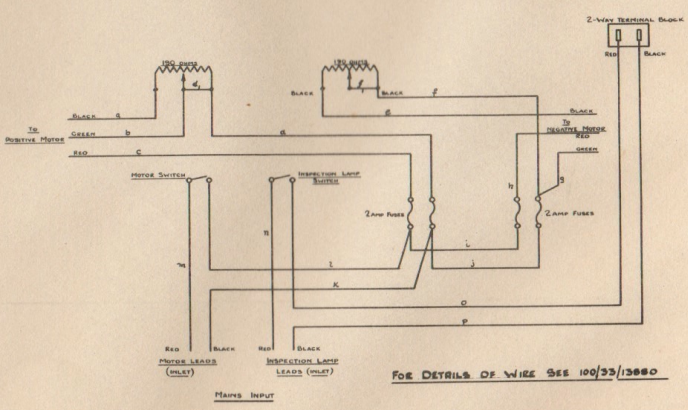

FOR DETAILS OF WIRE SEE 100/33/13880

CODE	No. OFF	DESCRIPTION
100/32/13259	1	REAR CONTROL PANEL & ANGLE STEEL
100/33/13287	1	COMP. NEG. CRUTCH CONTROL ROD (VERT)
100/33/13285	1	" " " " (HOR)
100/33/13289	1	" MIRROR TILT " " "
100/33/13290	1	" " " " " (VERT)
[illegible]	[illegible]	[illegible]
100/33/13880	1	DETAILS OF WIRE
[illegible]		
100/02/13284	1	POTENTIOMETER COVER
100/02/13285	1	SWITCH COVER
100/65/480	5	FUSEHOLDER
100/03/13266	2	NEG CRUTCH CONTROL KNOB
100/03/13264	2	MIRROR " "
100/03/13267	1	WINDOW FRAME
100/03/13268	1	FUSE COVER
100/03/13272	1	POS. RHEOSTAT DIAL
100/03/13273	1	NEG. " "
100/03/13276	1	SWITCH PANEL
100/03/13280	1	WINDOW GLASS
100/03/13281	1	TERMINAL BLOCK INSULATION
100/05/12893	5	CABLE CLIP
100/65/503	4	5 AMP FUSE
100/65/547	2	150 OHMS. POTENTIOMETER
100/65/343	2	TOGGLE SWITCH
100/65/546	1	TERMINAL BLOCK
100/65/573	2	POTENTIOMETER KNOB
BLS/E/3/16/S	4	SCREW SEC. CONTROL KNOB
RO/4/2/S	5	" " COVERS
RO/4/3/S	1	" " TERMINAL BLOCK
CSK/4/3/16/S	13	" " LABELS ETC.
CSK/4/3/S	1	" " TERMINAL BLOCK
N/4/S	22	NUT " LABEL ETC.
—	20	SHAKEPROOF FOR LABEL ETC.
100/03/13409	1	BTM REAR PANEL LABEL
100/03/13410	1	TOP " " "

SCALE ~ FULL SIZE

ISSUE No.	1	2			
CH. No.	5776				
DATE & SIGN	10-10-68	30-11-68			

ECO No.				TRACED	30.9.68
				DRAWN	
				CHECKED	

30-9-68

COMP. REAR CONTROL PANEL ~ PRESIDENT ARCLAMP

100/31/13260

COMPLETE REAR CONTROL PANEL

"PRESIDENT" ARC LAMP

Drawing No. 100/31/13260

Details	Part No.
Rear Control Panel and Angle Strip	100/32/13259
Complete Negative Crutch Control Rod (Vertical)	100/33/13257
Complete Negative Crutch Control Rod (Horizontal)	100/33/13288
Complete Mirror Tilt Control Rod (Horizontal)	100/33/13289
Complete Mirror Tilt Control Rod (Vertical)	100/33/13290
Details of Wire	100/33/13880
Potentiometer Cover	100/02/13284
Switch Cover	100/02/13285
Fuse Holder	100/65/429
Negative Crutch Control Knob	100/03/13265
Mirror Control Knob	100/03/13266
Window Frame	100/03/13267
Fuse Cover	100/03/13268
Positive Rheostat Dial	100/03/13272
Negative Rheostat Dial	100/03/13273
Switch Panel	100/03/13276
Window Glass	100/03/13280
Terminal Block Insulation	100/03/13281
Cable Clip	100/05/13593
5 amp.Fuse	100/65/165
190 Ohms Potentiometer	100/65/547
Toggle Switch	100/65/343.
Terminal Block	100/65/546
Potentiometer Knob	100/65/573
Screw Securing Control Knob	ALS/2/3/16/S
Screw Securing Covers	RD/4/1/4/S
Screw Securing Terminal Block	RD/4/3/4/S
Screw Securing Labels etc.	CSK/4/5/16/S
Screw Securing Terminal Block	CSK/4/3/4/S
Nut Securing Label etc.	N/4/S
Shakeproof for Label etc.	
Bottom Rear Panel Label	100/03/13409
Top Rear Panel Label	100/03/13410

SUBJECT TO D. 350 FOR LIMITS.

A. KERSHAW & SONS LTD. LEEDS.

100/32/12584

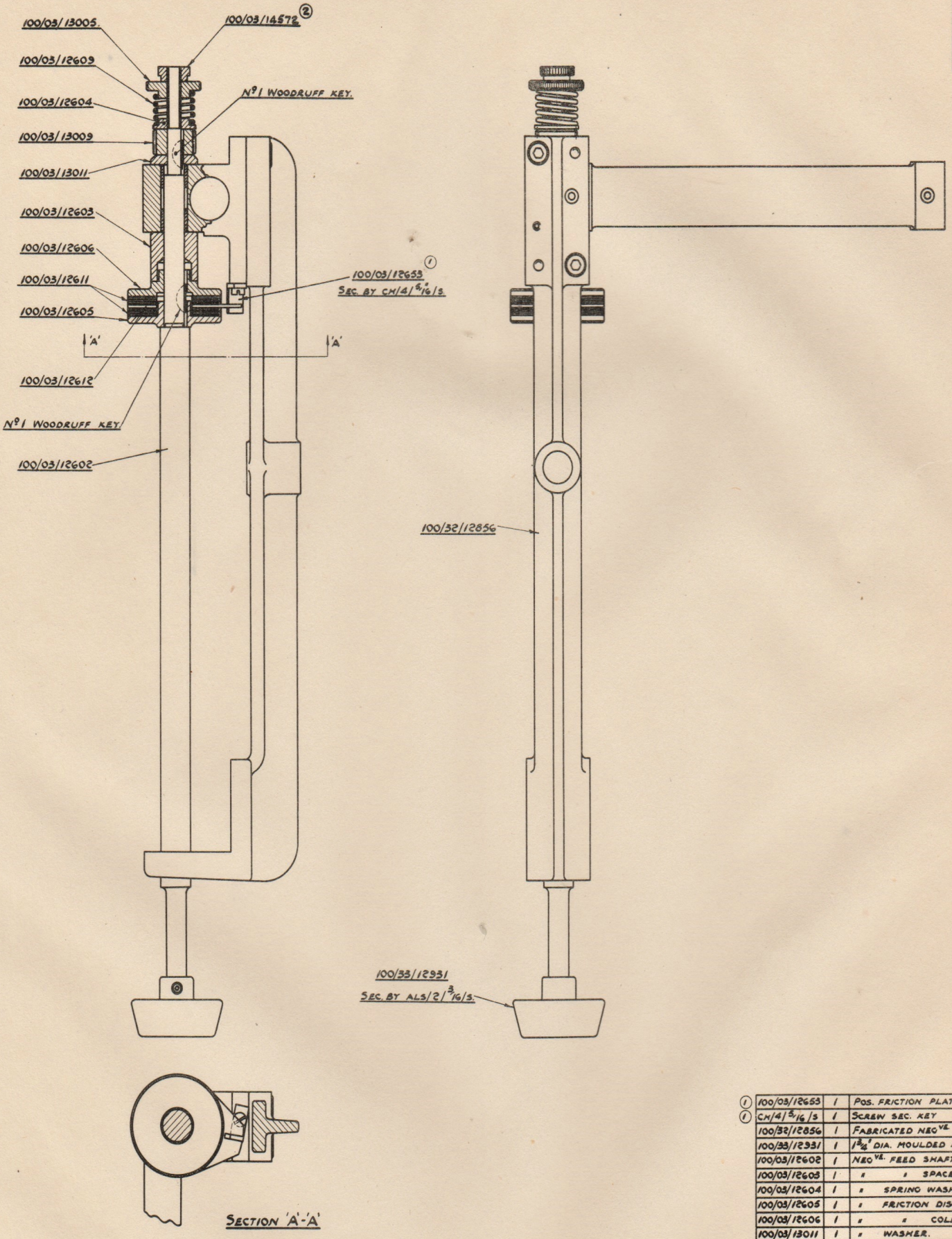

SECTION 'A'-'A'

(1)	100/03/12653	1	Pos. FRICTION PLATE KEY.
(1)	CH/4/5/16/S	1	SCREW SEC. KEY
	100/32/12856	1	FABRICATED NEGVE. CARRIAGE.
	100/33/12931	1	1 3/4" DIA. MOULDED KNOB.
	100/03/12602	1	NEGVE. FEED SHAFT.
	100/03/12603	1	" " SPACER.
	100/03/12604	1	" SPRING WASHER.
	100/03/12605	1	" FRICTION DISC.
	100/03/12606	1	" " COLLAR.
	100/03/13011	1	" WASHER.
	100/03/13003	1	" FEED GEAR.
	100/03/12609	1	FEED FRICTION SPRING.
	100/03/13005	1	FRICTION NUT.
	100/03/12611	2	" PAD.
	100/03/12612	1	" PLATE.
(2)	100/03/14572	1	" LOCKNUT.
	—	2	Nº1 WOODRUFF KEY.
	ALS/2/3/16/S	1	SCREW SEC. MOULDED KNOB.
	CODE	Nº	DESCRIPTION.

2	5922	10.1.49	CJB
1	5423	28.6.48	CJB

MODIFICATIONS

SCALE-FULL SIZE.

ASSEMBLY OF NEGATIVE CARRIAGE.

MATERIAL	PER 100	FINISH	REQR ON	TRACED	DW.
			100/32/12586	CHECKED	

10:6:48

100/32/12584

ASSEMBLY OF NEGATIVE CARRIAGE

"PRESIDENT" ARC LAMP

Drawing No. 100/32/12584

Details	Part No.
Positive Friction Plate Key	100/03/12653
Screw Securing Key	CH/4/5/16/S
Fabricated Negative Carriage	100/32/12856
$1\frac{3}{4}$" Dia. Moulded Knob	100/33/12931
Negative Feed Shaft	100/03/12602
Negative Feed Spacer	100/03/12603
Negative Spring Washer	100/03/12604
Negative Friction Disc	100/03/12605
Negative Friction Collar	100/03/12606
Negative Washer	100/03/13011
Negative Feed Gear	100/03/13009
Feed Friction Spring	100/03/12609
Friction Nut	100/03/13005
Friction Pad	100/03/12611
Friction Plate	100/03/12612
Friction Locknut	100/03/14572
No.1 Woodruff Key	
Screw Securing Moulded Knob	ALS/2/3/16/S

ASSEMBLY POSITIVE CARRIAGE

"PRESIDENT" ARC LAMP

Drawing No. 100/32/12593

Details	Part No.
1¾" Dia. Moulded Knob	100/33/12931
Positive Carriage and Bushes	100/33/13081
Positive Feed Shaft	100/03/12652
Friction Disc	100/03/13012
Friction Collar	100/03/13010
Washer	100/03/12607
Feed Gear	100/03/12608
Friction Spring	100/03/12609
Friction Nut	100/03/13005
Friction Pad	100/03/12611
Friction Plate	100/03/12612
Friction Plate Key	100/03/12653
Friction Locknut	100/03/14572
Key securing Drive Gear Etc.	
Positive Carriage Stop Screw	HX/2/1/S
Screw Securing Friction Plate Key	CH/4/5/16/S
Screw Securing Moulded Knob	ALS/2/3/16/S
Nut for Stop Screw	N/2/S

SUBJECT TO D. 350 FOR LIMITS.

A. KERSHAW & SONS LTD. LEEDS.

100/32/12593

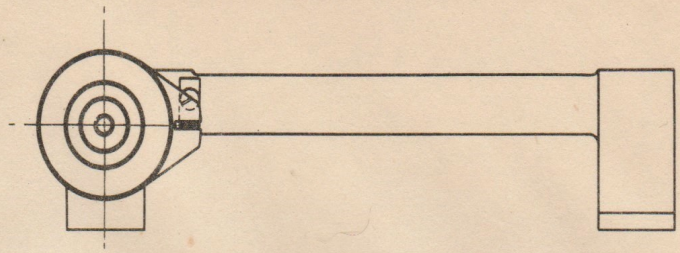

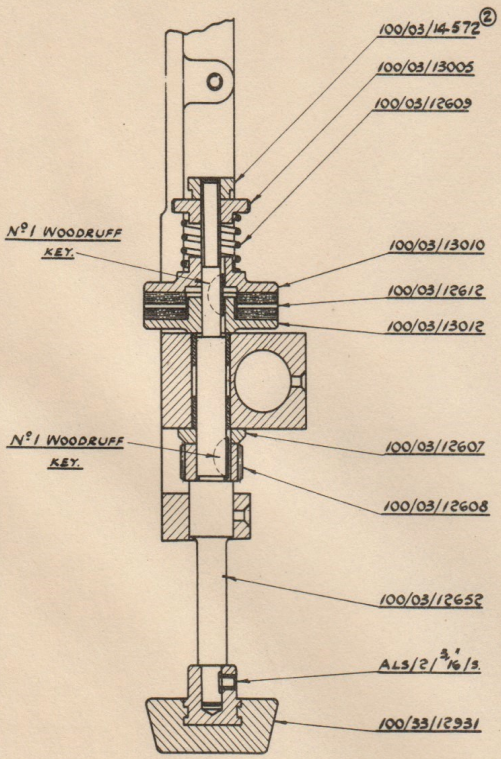

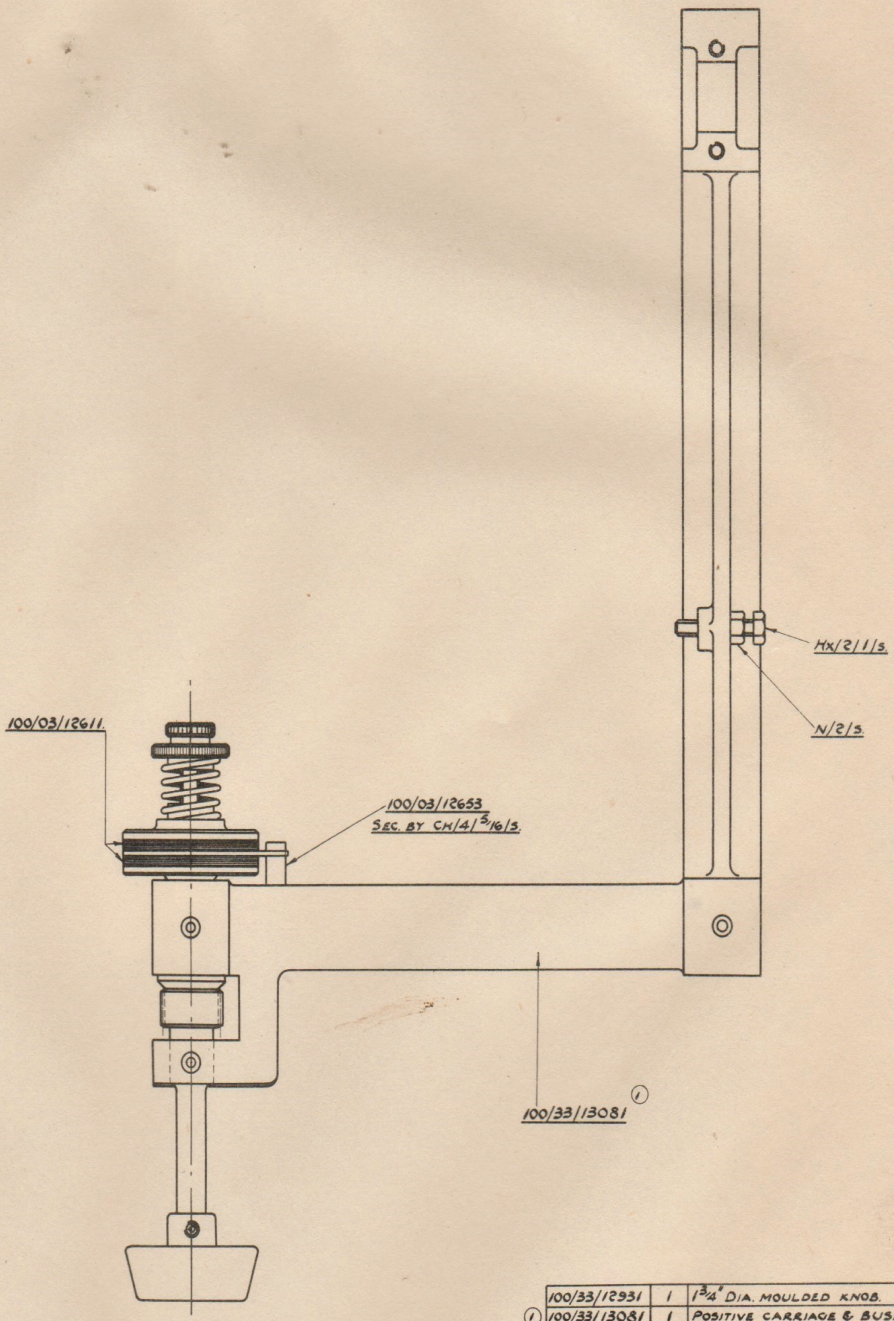

	100/33/12931	1	1 3/4" DIA. MOULDED KNOB.
(1)	100/33/13081	1	POSITIVE CARRIAGE & BUSHES.
	100/03/12652	1	POSITIVE FEED SHAFT.
	100/03/13012	1	FRICTION DISC.
	100/03/13010	1	FRICTION COLLAR.
	100/03/12607	1	WASHER.
	100/03/12608	1	FEED GEAR.
	100/03/12609	1	FRICTION SPRING.
	100/03/13005	1	" NUT.
	100/03/12611	2	" PAD.
	100/03/12612	1	" PLATE.
	100/03/12653	1	" " KEY.
(2)	100/03/14572	1	" LOCKNUT.
	—	2	KEY SEC. DRIVE GEAR ETC.
	Hx/2/1/S.	1	POS^VE CARRIAGE STOP SCREW.
	CH/4/3/16/S.	1	SCREW SEC. FRICTION PLATE KEY
	ALS/2/3/16/S.	1	" " MOULDED KNOB.
	N/2/S.	1	NUT FOR STOP SCREW.
	CODE	Nº	DESCRIPTION.

2	5922	10.1.49	GB
1	5409	16.6.48	GB

MODIFICATIONS

SCALE: FULL SIZE.

ASSEMBLY OF POSITIVE CARRIAGE.

MATERIAL	PER 100	FINISH	REQD ON
			100/32/12594

TRACED DW.

CHECKED

8:6:48

100/32/12593

SUBJECT TO D. 350 FOR LIMITS.

A. KERSHAW & SONS LTD. LEEDS.

100/32/12676

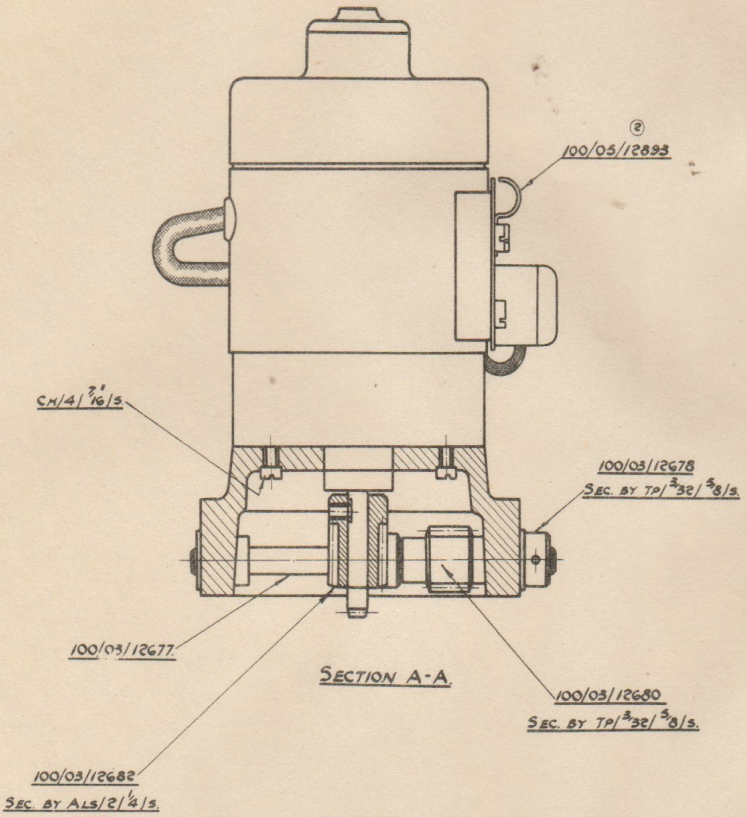

SECTION A-A.

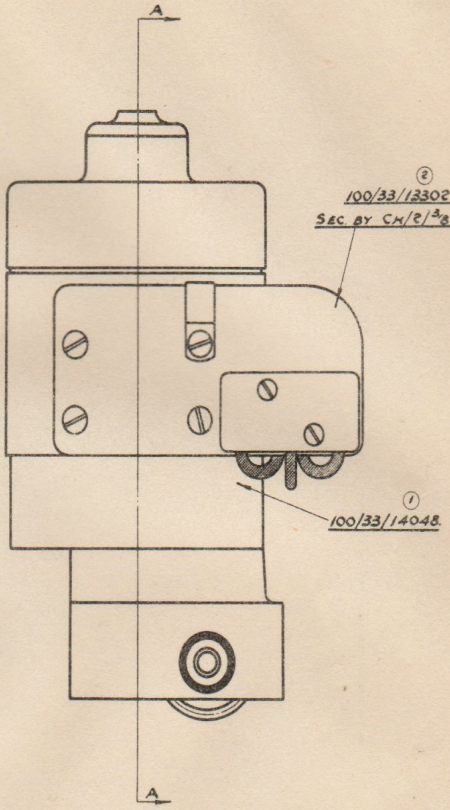

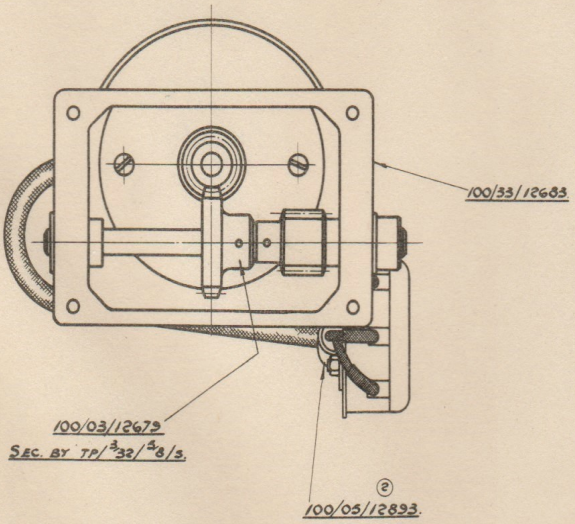

(2)	CH/2/3/8/S.	4	SCREW SEC. MOTOR WIND.
(2)	100/33/13302	1	COMP. MOTOR WIND.
(2)	100/05/12893	2	CABLE CLIP.
	100/33/12683	1	TOP CASTING & BUSHES.
	100/03/12677	1	GEAR BOX INTERSHAFT.
	100/03/12678	1	INTER SHAFT COLLAR.
	100/03/12679	1	POS. INTER. WORM WHEEL.
	100/03/12680	1	POS. INTER. WORM.
	100/03/12682	1	POS. MOTOR WORM.
(1)	100/33/14048	1	FEED MOTOR & CABLE
	CH/4/3/16/S.	2	SCREW SEC. MOTOR.
	ALS/2/1/4/S.	1	SCREW SEC. MOTOR WORM.
	TP/3/32/3/8/S	3	TAPER PIN SEC. COLLAR ETC.
	CODE	Nº	DESCRIPTION.

2	5787	29.10.48	D/A
1	5756	29.10.48	D/A

MODIFICATIONS

SCALE:- FULL SIZE.

ASSEMBLY POSITIVE GEAR BOX. - PRESIDENT ARCLAMP -

MATERIAL	PER 100	FINISH	REQ'D ON					TRACED	
			100/31/12780					CHECKED	

10 : 5 : 48

100/32/12676

ASSEMBLY POSITIVE GEAR BOX

"PRESIDENT" ARC LAMP

Drawing No. 100/32/12676

Details	Part No.
Screw Securing Motor Wing	CH/2/3/8/S
Complete Motor Wing	100/33/13302
Cable Clip	100/05/12893
Top Casting and Bushes	100/33/12683
Gear Box Intershaft	100/03/12677
Inter Shaft Collar	100/03/12678
Positive Inter Worm Wheel	100/03/12679
Positive Inter Worm	100/03/12680
Positive Motor Worm	100/03/12682
Feed Motor and Cable	100/33/14048
Screw Securing Motor	CH/4/7/16/S
Screw Securing Motor Worm	ALS/2/1/4/S
Taper Pin Securing Collar Etc.	TP/3/32/5/8/S

SUBJECT TO D. 350 FOR LIMITS.

A. KERSHAW & SONS LTD. LEEDS.

100/32/12687

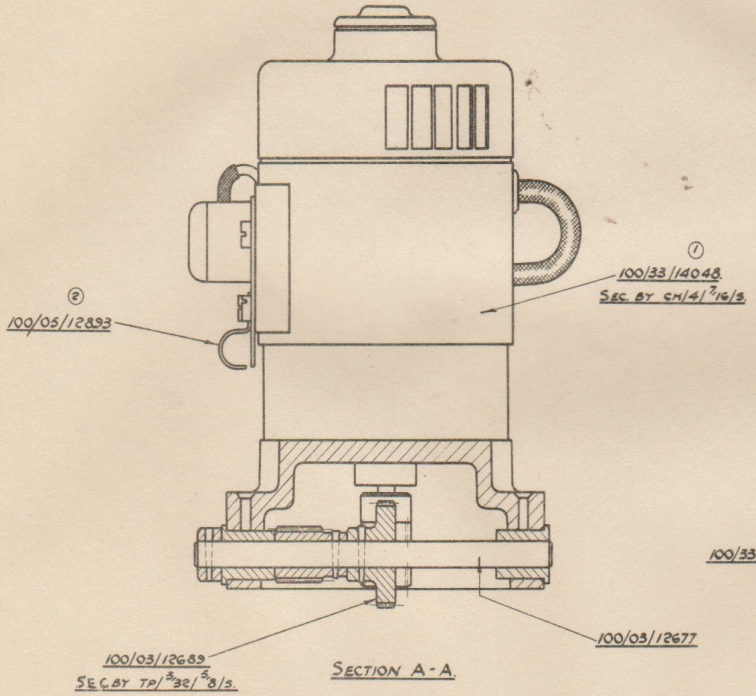

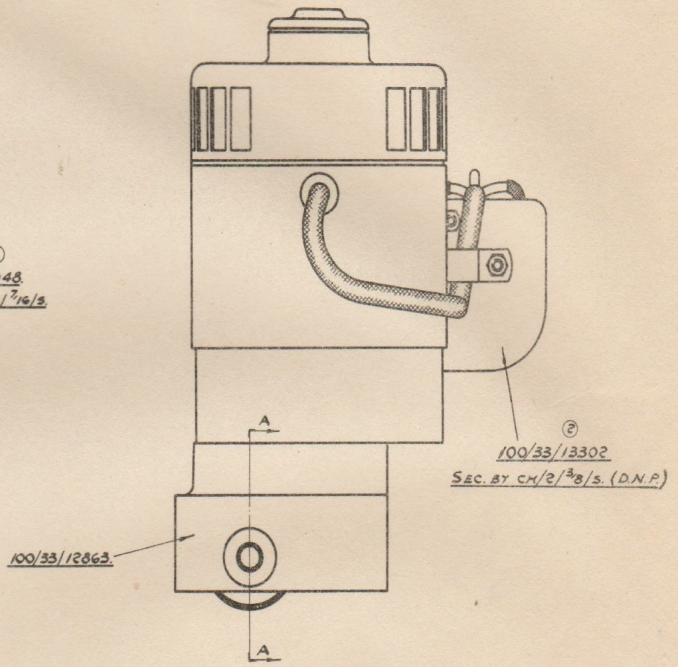

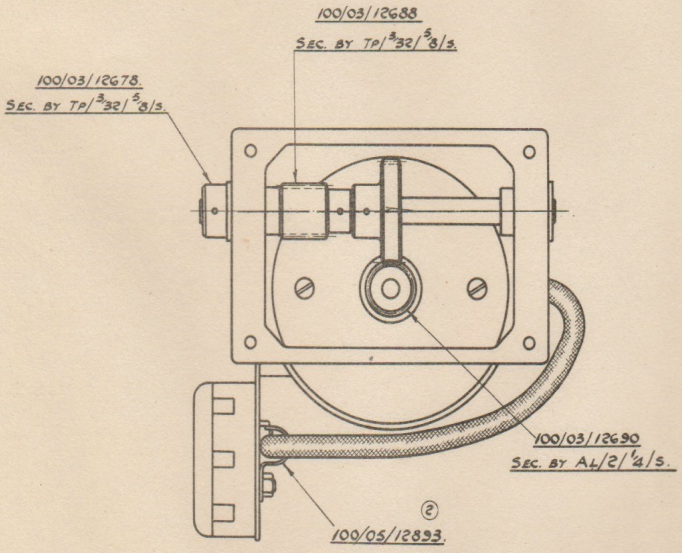

(2)	CH/2/3/8/S	4	SCREW SEC. MOTOR WING.
(2)	100/33/13302	1	COMP. MOTOR WING.
(2)	100/05/12893	2	CABLE CLIP.
	100/33/12683	1	TOP CASTING & BUSHES.
	100/03/12688	1	NEO.VE. INTER WORM.
	100/03/12689	1	NEO.VE. INTER WORM WHEEL.
	100/03/12677	1	GEAR BOX INTER SHAFT.
	100/03/12690	1	NEO.VE. MOTOR WORM.
	100/03/12678	1	INTERSHAFT COLLAR.
(1)	100/33/14048	1	FEED MOTOR & CABLE.
	CH/4/3/16/S.	2	SCREW SEC. MOTOR.
	AL3/2/1/4/S.	1	SCREW SEC. MOTOR WORM.
	TP/3/32/5/8/S.	3	PIN SEC. COLLAR ETC.
	CODE	Nº	DESCRIPTION

2	5755	29/10/48	A/B
1	5757	29/10/48	B/B.

MODIFICATIONS

SCALE:- FULL SIZE.

ASSY. OF NEG^VE. GEAR BOX AND MOTOR.

'PRESIDENT' AEROLAMP

MATERIAL	PER 100	FINISH	REQ'D ON				TRACED		11:5:48
			100/31/12720				CHECKED		100/32/12687

ASSEMBLY OF NEGATIVE GEAR BOX AND MOTOR

"PRESIDENT" ARC LAMP

Drawing No. 100/32/12687

Details	Part No.
Screw Securing Motor Wing	CH/2/3/8/S
Complete Motor Wing	100/33/13302
Cable Clip	100/05/12893
Top Casting and Bushes	100/33/12683
Negative Inter Worm	100/03/12688
Negative Inter Worm Wheel	100/03/12689
Gear Box Inter Shaft	100/03/12677
Negative Motor Worm	100/03/12690
Intershaft Collar	100/03/12678
Feed Motor and Cable	100/33/14048
Screw Securing Motor	CH/4/7/16/S
Screw Securing Motor Worm	ALS/2/1/4/S
Pin Securing Collar Etc.	TP/3/32/5/8/S

DRAWING NO. 100/33/13880

WIRING DETAILS (REAR PANEL)

PRESIDENT ARC LAMP

CODE	LENGTH	COLOUR OF SLEEVES	ENDS 1	ENDS 2	REMARKS
a	14"	Black	4 BA TAG(100/65/455)	4 BA TAG (100/65/455)	
b	13"	Green	" " "	" " "	
c	20"	Red	" " "	Bared and Tinned	
d	13"	Black	" " "	" " "	
d.1.	½"	-	" " "	-	Wire Bared and Tinned & Soldered to 'd'
e	18½"	Black	" " "	4 BA TAG (100/65/455)	
f	12½"	"	" " "	Bared and Tinned	
f.1	½"	-	" " "	-	Wire Bared and Tinned & Soldered to 'f'
g	13"	Green	" " "	Bared and Tinned	Joined to Wire 'f' at Fuseholder
h	13½"	Red	" " "	" " "	
i	7"	"	Bared and Tinned	" " "	One end joined to Wire 'l' at Fuseholder
j	7"	Black	" " "	" " "	One end joined to Wire 'k' at Fuseholder
k	7½"	Black	2 BA SPADE (100/65/517)	" " "	One end joined to Wire 'j' at Fuseholder
l	8"	Red	Bared and Tinned	" " "	One end joined to Wire 'i' at Fuseholder
m	7"	"	2 BA SPADE (100/65/517)	" " "	
n	7½"	"	P.O.40 TAG (100/65/589)	" " "	
o	15½"	"	" " "	" " "	
p	14"	Black	" " "	P.O.40 TAG (100/65/589)	

TYPE OF WIRE: All 14/.0076 Asbestos Covered.

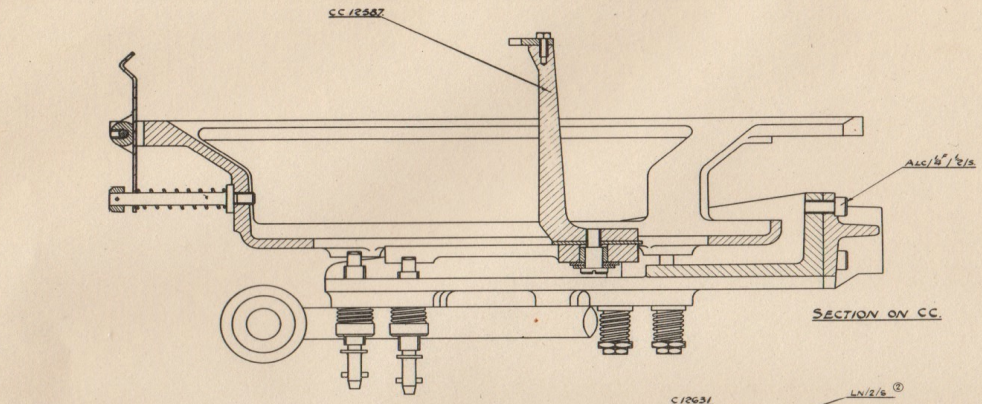

SECTION ON CC.

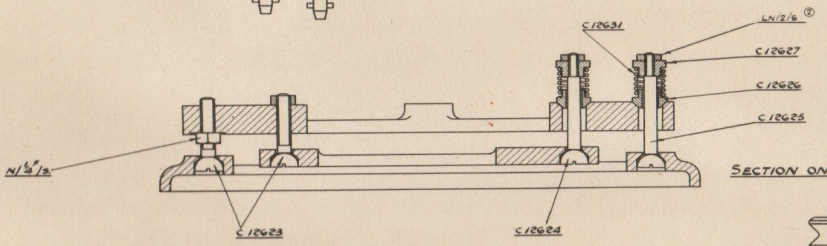

SECTION ON B.B.

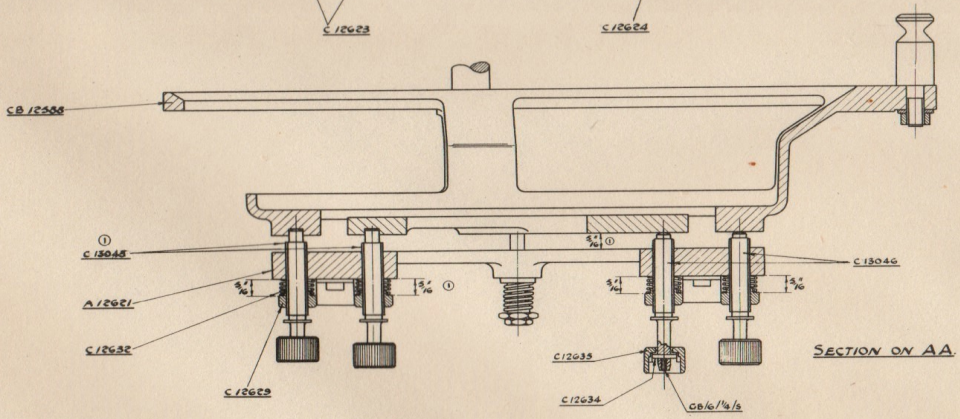

SECTION ON AA.

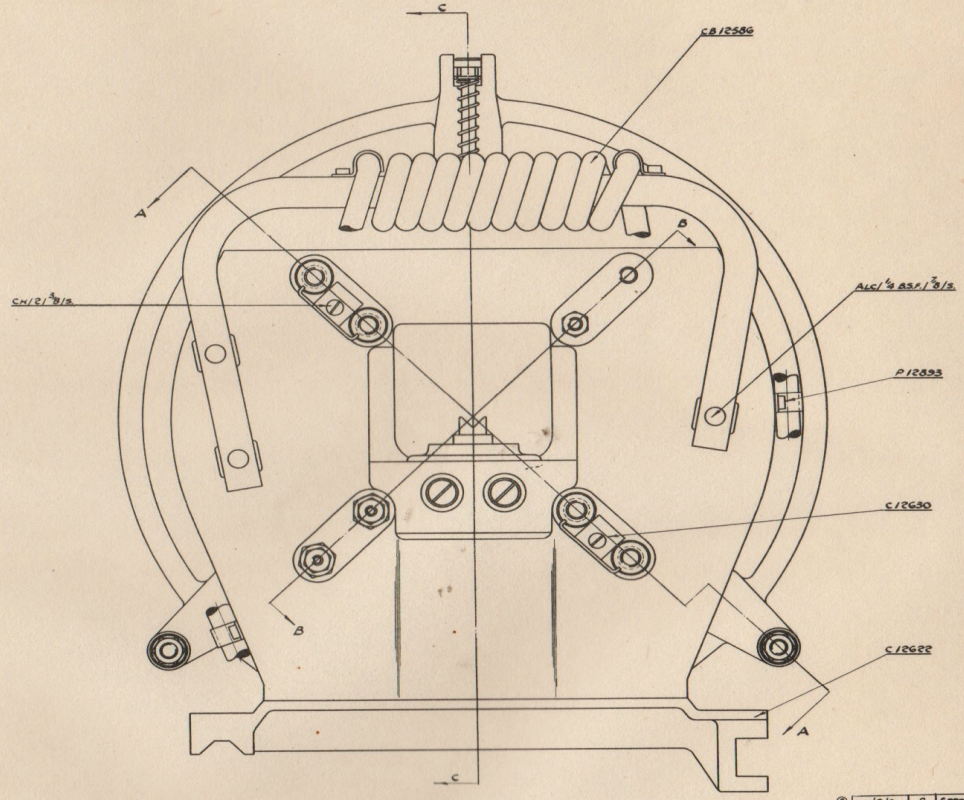

②	LN/2/6	2	SPRING RETAINING LOCKNUT.
①	C13045	2	ADJUSTING SCREW LONG.
	GB/6/⅛/S	4	SCREW SEC. UNIVERSAL JOINT P
	CB 12588	1	MIRROR HOLDER.
	CC 12587	1	NEO. CAUTCH ARM.
	CB12586	1	MAGNET.
	A12621	1	MIRROR SUPPORT.
	C12622	1	" " BRIDGE.
	C12623	2	ADJUSTING BOLT.
	C12624	1	NEO. PIVOT BOLT.
	C12625	1	MIRROR PIVOT BOLT.
	C12626	2	PIVOT COLLAR.
	C12627	2	SPRING RETAINING NUT.
②	C12628	2	" " " "
	C12629	4	ADJUSTING SCREW NUT.
	C12630	2	NUT KEY.
	C12631	2	PIVOT SPRING.
	C12632	4	SPRING.
①	C13046	2	ADJUSTING SCREW SHORT.
	C12634	4	UNIVERSAL JOINT PIN.
	C12635	4	" " NUT.
	P12893	2	CABLE CLIP.
	ALC/⅛"/⅛/S	3	SCREW SEC. MAGNET.
	ALC/⅛"/½/S	3	" " MIRROR SUPPORT
	CH/2/⅜/S	2	" " NUT KEY.
	N/¼"/S	2	NUT SEC. ADJUST. BOLT.
	CODE	Nº	DESCRIPTION.

SCALE:- FULL SIZE					
ISSUE Nº	1	2			
CH. NT. Nº	5878	6034			
DATE & SIG	7-10-48	19-12-48			

COMPLETE MIRROR HOLDER - PRESIDENT ARCLAMP.

REQ. ON			
CA12720			
DRAWN	H.J.T.		
TRACED	BY.		
CHECKED	J.C.		

CA12589

100/51/12589

COMPLETE MIRROR HOLDER

"PRESIDENT" ARC LAMP

Drawing No. CA.12589

Details	Part No.
Spring Retaining Locknut	LN/2/S
Adjusting Screw Long	C.13045
Screw Securing Universal Joint Pin	CB/6/1/4/S
Mirror Holder	CB12588
Negative Crutch Arm	CC.12587
Magnet	CB.12586
Mirror Support	A.12621
Mirror Support Bridge	C.12622
Adjusting Bolt	C.12623
Negative Pivot Bolt	C.12624
Mirror Pivot Bolt	C.12625
Pivot Collar	C.12626
Spring Retaining Nut	C.12627
Adjusting Screw Nut	C.12629
Nut Key	C.12630
Pivot Spring	C.12631
Spring	C.12632
Adjusting Screw Short	C.13046
Universal Joint Pin	C.12634
Universal Joint Nut	C.12635
Cable Clip	P.12893
Screw Securing Magnet	ALC/$\frac{1}{4}$F/7/8/S
Screw Securing Mirror Support	ALC/$\frac{1}{4}$F/$\frac{1}{2}$/S
Screw Securing Nut Key	CH/2/3/8/S
Nut Sec. Adjust Bolt	N/$\frac{1}{4}$F/S

THE GAUMONT KALEE "20" STAND

The stand incorporates a heavy cast iron base fitted with levelling screws. Interchangeable columns and packing pieces are available complete with a cap which is fitted with a pivot bar at the front end carrying the main support casting, and at the rear end, a pivoted trunnion block through which the elevating screw passes. The main support casting carries the lamp beam, soundhead and driving motor. The motor, driving belts and projector drive gearing are enclosed by quickly detachable cast guards.

Dependent upon which column is fitted and with or without packing pieces, the level optical centre height of the equipment may be 46", 49", 52" or 55". The maximum tilt varies of course according to the height of the centre column and this, along with the required port hole height when the equipment is operating at a given rake and in a fixed position relative to the front wall of the operating box is given in the table on Drawings 1943/49 and 1944/49.

The stand is completely wired in the factory for Soundhead, Lamp and Projector, and all wiring terminates at a distribution board inside and at the front end of the box casting situated on the non-operating side of the equipment. Cable entries are also conveniently arranged in the front end of this casting thus installation wiring can be neatly and readily carried out. All switches etc. are suitably positioned in the boxes mounted on the operating side of the stand and include rheostat for the driving motor, change-over switch, motor switch, fuses and main arc switch. Variations in this arrangement are available according to exact requirements and ballast switches alone with meters may be fitted if required. Pyrene Fire Extinguisher Equipment may also be fitted if required, for particulars of which see Section relating to "The Projector".

For Stand Wiring see Plate No.38 and 39, being wiring for No.1 and No.2. machines when Pyrene equipment is not fitted. Plates Nos. 36 and 37 shew the wiring for No.1 and 2 machines when Pyrene equipment is fitted. Plate No. 40 is the wiring for the Arc Control Box and Plate No.41 is the Installation wiring diagram.

In addition the stand is available incorporating a Universal nose mounting suitable for any soundhead and also lamp-rails for the mounting of other makes of lamp. When these are supplied wiring arrangements are made accordingly on installation.

The bottom spool box is of sheet steel construction and is mounted on a substantial cast arm secured to the main support casting. A chain driven "take-up" complete with jockey sprocket, is provided for the spool spindle and a readily detachable cast guard completely encloses the drive.

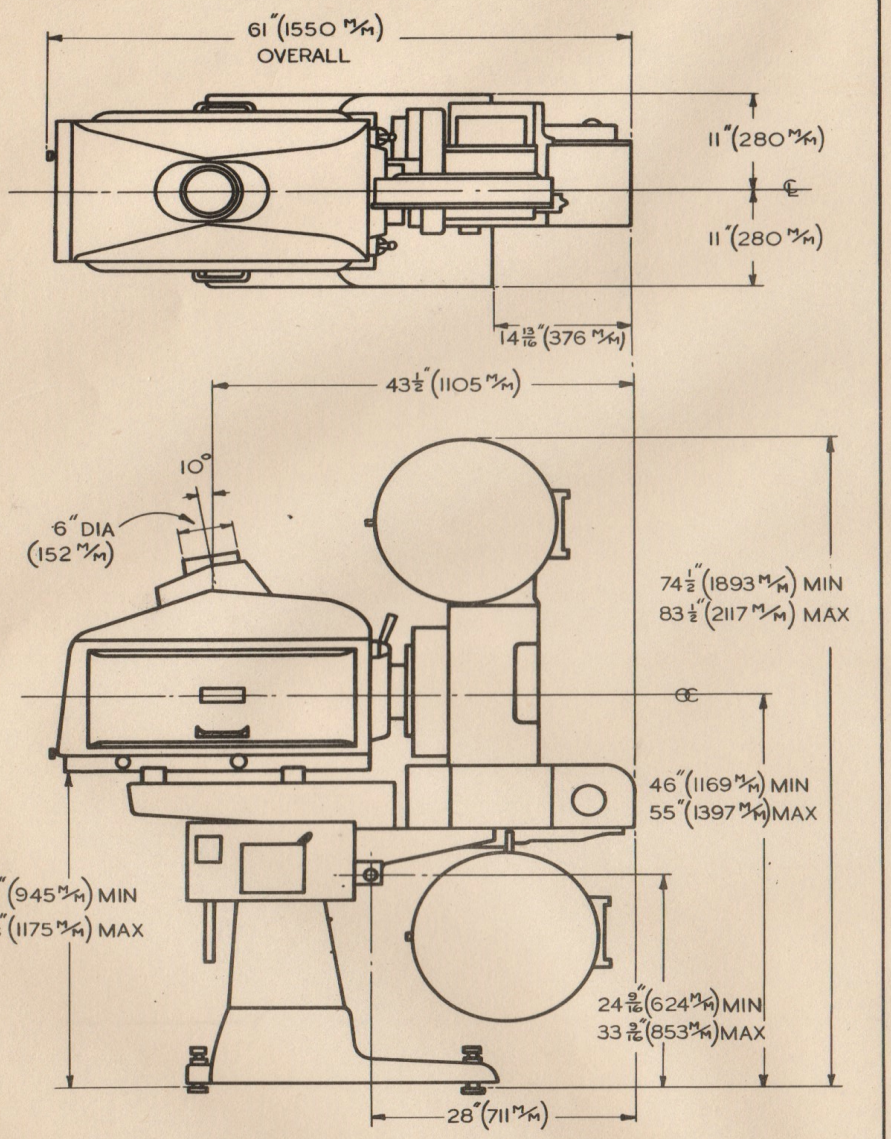

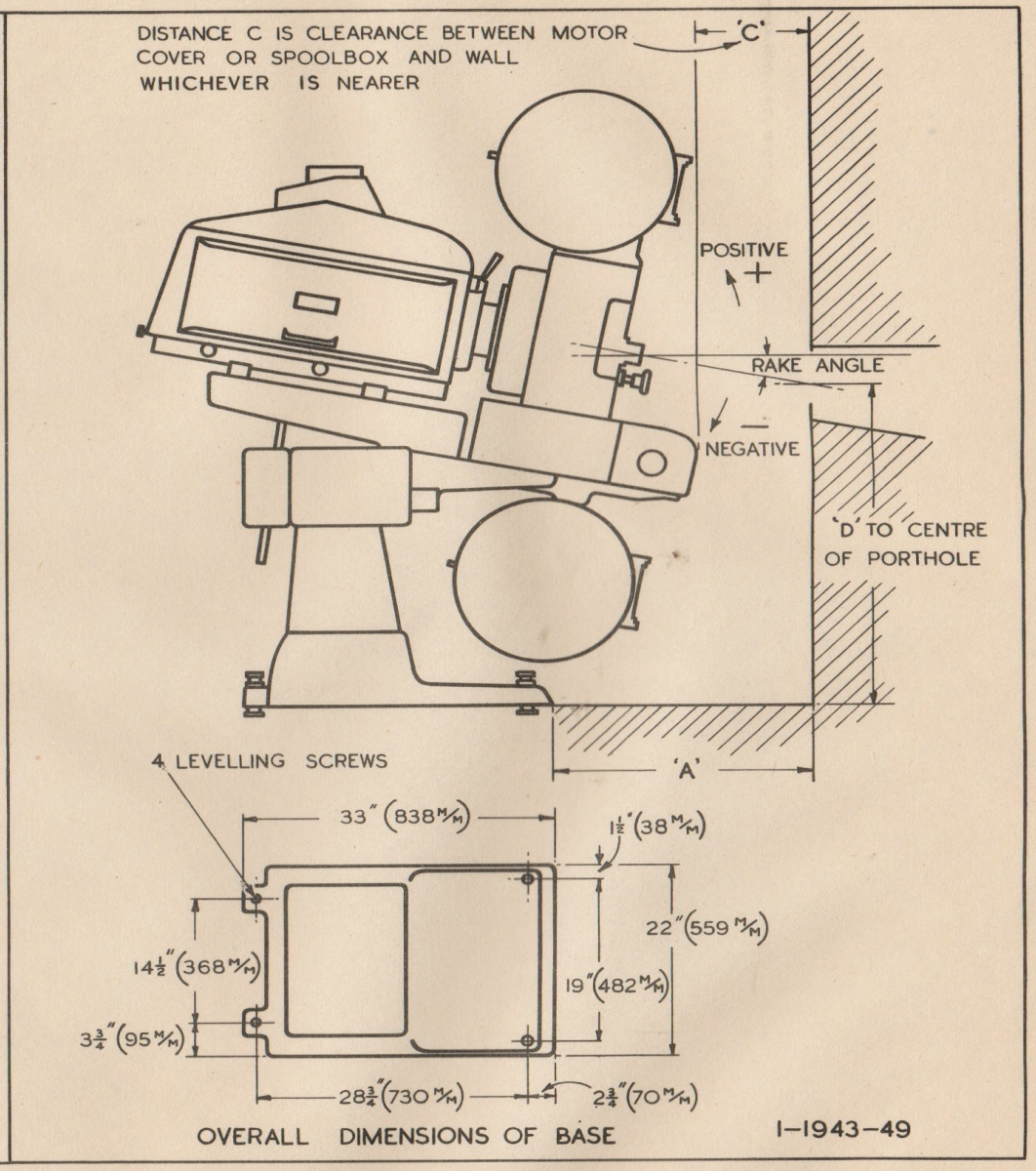

OVERALL DIMENSIONS OF BASE

I-1943-49

G.K. 19 STAND

The stand incorporates a heavy cast iron pedestal base fitted with screws. A packing piece is available for inserting below a cap which is fitted with a pivot bar at the front end carrying the main support casting, and at the rear end, a pivoted trunnion block through which the elevating screw passes. The main support casting carries the lamp beam, soundhead and driving motor. The motor, driving belts and projector drive gearing are enclosed by quickly detachable cast guards.

Dependent upon whether the packing piece is inserted the level optical centre height of the equipment may be 46" or 49". The maximum tilt is of course dependent upon the height of the centre column and this along with the required port-hole height when the equipment is operating at a given rake and in a fixed position relative to the front wall of the operating box is given in the table on Drawings 1943/49 and 1944/49. N.B. When referring to these tables particular note should be taken of the 46" and 49" level optical centre height.

The Stand is completely wired in the factory for soundhead, lamp and projector, and all wiring terminates at a distribution board inside and at the front end of the box casting situated on the non-operating side of the equipment. Cable entries are also conveniently arranged in the front end of this casting thus installation wiring can be neatly and readily carried out. All switches etc. are suitably positioned in the boxes mounted on the operating side of the stand and include rheostat for the driving motor, changeover switch, motor switch, fuses and main arc switch. Variations in this arrangement are available according to exact requirements and ballast switches along with meters may be fitted if required. Pyrene Fire Extinguisher Equipment may also be fitted.

For Stand Wiring see Plate No. 38 and 39, being wiring for No.1 and No.2. machines when Pyrene equipment is <u>not</u> fitted. Plates Nos. 36 and 37 shew wiring for No.1 and 2 machines when Pyrene equipment is fitted. Plate No. 40 is the wiring for the Arc Control Box and Plate No.41 is the Installation wiring diagram.

In addition the stand is available incorporating a Universal nose mounting suitable for any soundhead and also lamp-rails for the mounting of other makes of lamp. When these are supplied wiring arrangements are made accordingly on installation.

The bottom spool box is of sheet steel construction and is mounted on a substantial cast arm secured to the main support casting. A chain driven "Take-up" complete with jockey sprocket, is provided for the spool spindle and a readily detachable cast guard completely encloses the drive.

DIMENSIONAL & INSTALLATION DIAGRAM FOR GK19 & GK20 OUTFITS

PORTHOLE HEIGHTS OF STAND FOR 52" (1321 M/M) LEVEL OPTICAL CENTRE

	WHEN A=24" (609 M/M)				WHEN A=30" (762 M/M)				WHEN A=36" (914 M/M)					WHEN A=24" (609 M/M)				WHEN A=30" (762 M/M)				WHEN A=36" (914 M/M)			
	D		C		D		C		D		C			D		C		D		C		D		C	
RAKE	INS	M/M	INS	M/M	INS	M/M	INS	M/M	INS	M/M	INS	M/M	RAKE	INS	M/M	INS	M/M	INS	M/M	INS	M/M	INS	M/M	INS	M/M
+5°	55 1/8	1400	9 3/4	248	55 1/2	1410	15 3/4	400	56	1422	21 3/4	553	−13°	44 1/8	1121	7 1/2	190	42 3/4	1086	12 5/8	321	41 3/8	1052	18 5/8	473
+4°	54 3/8	1382	9 5/8	244	54 3/4	1391	15 5/8	397	55 1/8	1400	21 5/8	549	−14°					42	1067	12	305	40 5/8	1033	18	458
+3°	53 3/4	1365	9 1/2	241	54	1372	15 1/2	393	54 1/4	1378	21 1/2	546	−15°					41 1/4	1048	11 1/4	286	39 3/4	1010	17 1/4	438
+2°	53 1/4	1353	9 3/8	238	53 1/4	1353	15 3/8	390	53 1/2	1360	21 3/8	543	−16°					40 5/8	1033	10 5/8	270	38 7/8	988	16 5/8	423
+1°	52 5/8	1337	9 1/4	235	52 5/8	1337	15 1/4	387	52 3/4	1340	21 1/4	540	−17°					39 7/8	1014	10	254	38 1/8	968	16	406
0°	52	1321	9 1/8	232	52	1321	15 1/8	384	52	1321	21 1/8	536	−18°					39 1/4	997	9 3/8	238	37 1/4	946	15 1/4	387
−1°	51 3/8	1305	9	229	51 3/8	1305	15	381	51 1/4	1302	21	533	−19°					38 1/2	978	8 5/8	219	36 1/2	927	14 3/4	375
−2°	50 3/4	1290	8 7/8	225	50 3/4	1290	14 7/8	378	50 1/2	1283	20 7/8	530	−20°					37 3/4	959	8	203	35 5/8	905	14	355
−3°	50 1/8	1273	8 5/8	219	50	1270	14 5/8	371	49 3/4	1264	20 5/8	524	−21°					37	940	7 1/2	190	34 3/4	883	13 1/2	343
−4°	49 5/8	1261	8 1/2	216	49 1/4	1251	14 1/2	368	48 7/8	1242	20 1/2	520	−22°									34	864	13	330
−5°	48 7/8	1242	8 3/8	213	48 1/2	1232	14 3/8	365	48	1220	20 3/8	518	−23°									33 1/8	841	12 3/8	315
−6°	48 1/4	1226	8 1/4	210	47 3/4	1213	14 1/4	362	47 1/8	1198	20 1/4	515	−24°									32 1/4	820	11 3/4	298
−7°	47 5/8	1210	8 1/8	206	47	1194	14 1/8	358	46 1/4	1175	20 1/8	511	−25°									31 3/8	797	11 1/8	283
−8°	47 1/8	1197	8 1/8	206	46 1/4	1175	14 1/8	358	45 1/2	1156	20 1/8	511	−26°									30 3/8	772	10 5/8	270
−9°	46 1/2	1182	8	203	45 1/2	1156	14	355	44 5/8	1134	20	508	−27°									29 3/4	756	10 1/8	258
−10°	45 7/8	1166	7 7/8	200	44 3/4	1137	13 7/8	352	43 3/4	1112	19 7/8	505	−28°									28 7/8	733	9 1/2	242
−11°	45 1/4	1150	7 7/8	200	44 1/8	1121	13 1/2	343	43	1093	19 1/2	495	−29°									28	711	9	229
−12°	44 5/8	1134	7 3/4	197	43 1/2	1105	13 1/8	333	42 1/4	1074	19 1/8	486	−30°									27	686	8 1/2	216

NOTE:—
TO ALLOW SPOOLBOX DOOR TO OPEN, CLEARANCE 'C' SHOULD NOT BE LESS THAN 7" (178 M/M)

ALTERNATIVE HEIGHTS

3" (76 M/M) HIGHER — ADD 3" (76 M/M) TO 'D' ABOVE — MAXIMUM RAKE — 30°
3" (76 M/M) LOWER — SUBTRACT 3" (76 M/M) FROM 'D' ABOVE — MAXIMUM RAKE — 25°
6" (152 M/M) " " 6" (152 M/M) " " " " " " " " —20°

1-1944-49

G.K.20. INSTALLATION

Refer to Installation Diagram No. 1-2045-49 and Wiring Diagram Plate No.41.

1. Secure the column to the iron base casting using ½" B.S.F. Allen Cap screws 1¾" long.
   It should be noted that if a packing piece is supplied it is fitted between the column and the base casting, using ½" B.S.F. Allen Cap screws 1½" long, for securing to the base and ½" B.S.F. Allen Cap 1¾" long for securing the column to the packing piece.

2. Secure the pivot and trunnion beam to the top of the column, using 3" long ½" B.S.F. Allen cap screws.

3. Mount the canti-lever casting in position by removing the pivot and re-threading through the trunnion beam and canti-lever casting, taking care to secure the pivot by means of the Allen set screw.

4. Mount the lamp support beam which is secured to the canti-lever by ½" B.S.F. Allen Cap screws 1" long.
   The elevating screw is integral with the lamp support beam, and requires threading through the trunnion, taking care not to damage the screw thread. Note the stop collar at the end of elevating screw.

5. Mount the switch boxes complete by threading over the nose of the equipment. These are then secured to the trunnion beam by ¼" Allen Cap screws ¾" long which are readily accessible when the cover plates are removed. Note that the switch box cover is hinged, the other covers being secured by 2BA screws.

6. Secure the soundhead in position, using ⅜" Whitworth Hex. head screws 1" long.

7. Mount the driving motor, using 5/16" Whitworth, 1½" long screws, nuts and washers. Fit driving belts.

8. Mount bottom spool box securing by ½" B.S.F. Allen cap screws 1½" long.

9. Fit Driving chain on bottom spool take-up and adjust idler sprocket.

10. Mount the projector securing by ⅜" Whitworth Hex. Screws 1" long.

11. Fit the adapter gear as shown on drawing. Ensure that both spindle and gear bore are thoroughly clean and then oil spindle before assembly.

12. Mount the top spool box and secure with 5/16" B.S.F. Hex. headed screws 1" long.

13. Mount Pyrene equipment and connect all gas pipes. Note that when Pyrene equipment has been ordered all cable connections are made to knock-off switches etc. before the stand leaves the factory.

14. Mount the President Arc Lamp locating on the rails and slide forward until the back of the mirror is 32⅝" from the gate when the mirror is in the centre of its focussing movement and secure by 5/16" Whit. Hex. headed screws 1¼" long.

15. Refer to Plate No.41. and make all cable connections.

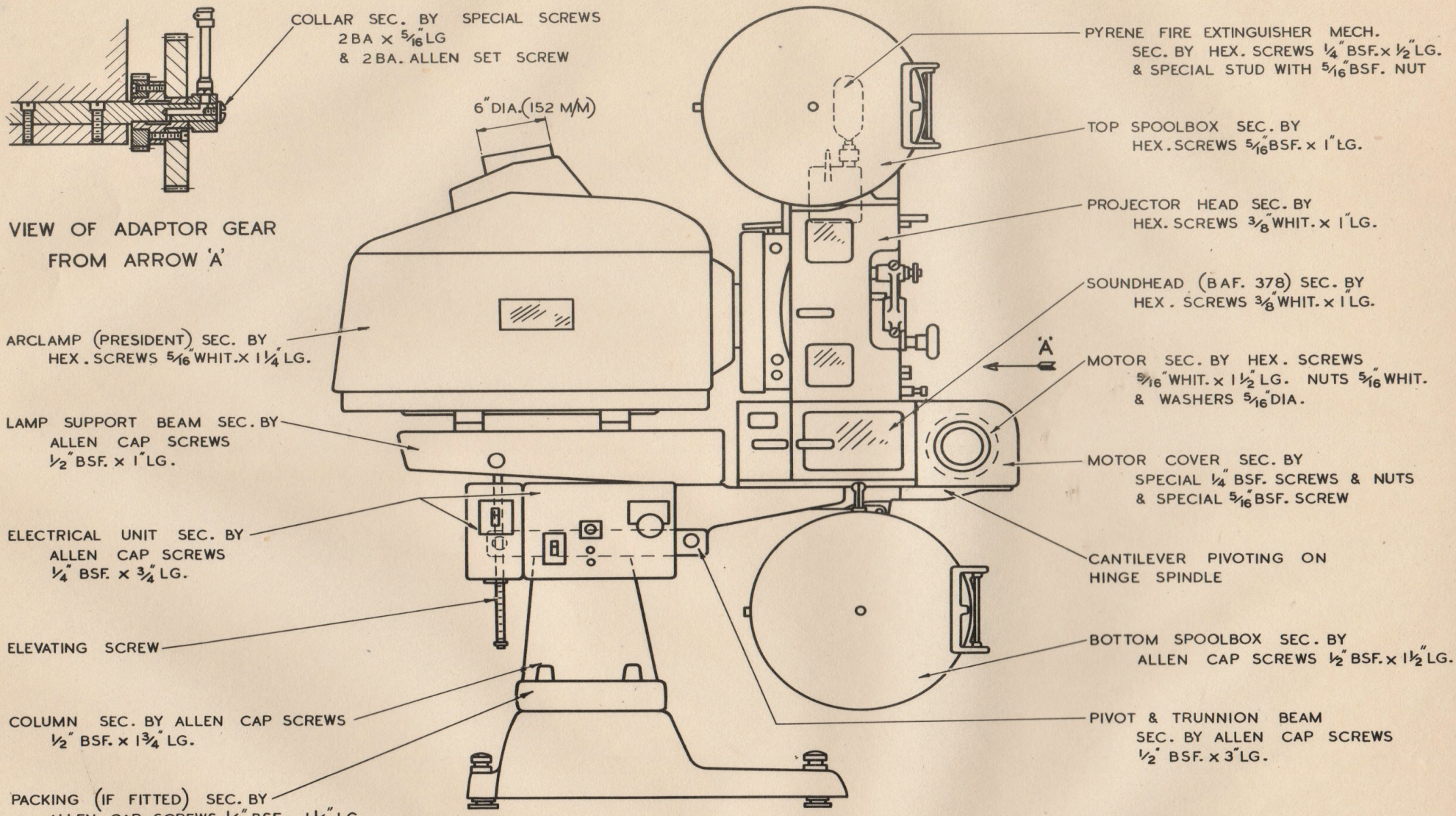

INSTALLATION DIAGRAM FOR GK 20 OUTFIT

I-2045-49

PICTURE CHANGEOVER

GENERAL DESCRIPTION

The electrically operated picture changeover device operates on the safety shutter, but in such a way that no derangement of the changeover system can prevent the shutter closing should the force exerted by the centrifugal governor fail due to the slowing down or stopping of the machine.

The Safety Shutter is raised by a floating lever acted upon independently by both the Governor and a changeover magnet. Neither acting alone can open the shutter, which can only open and remain open so long as both exert a pull. The changeover operating mechanism proper is very simple, consisting merely of a tractive magnet arranged to pull down an armature connected to the floating lever operating the shutter. Magnet core and armature are laminated and fitted with slug rings, and wound for operating on A.C. supply at "Mains Voltage". The magnet is in circuit the whole time that the picture is on the screen; changeover is effected by a throw-over switch which breaks the magnet circuit of the outgoing machine, allowing its shutter to fall and simultaneously energises the magnet of the incoming machine, the shutter of which opens because its actuating lever is being pulled both by centrifugal and magnetic force.

A two station switch circuit is employed which allows operation from either machine. This can be extended for three machine operation. The picture changeover could readily be coupled to the sound changeover, but amongst operators there is a divergence of opinion as to the merits of such a provision.

The magnet is wired into the motor circuit so that it is only energisable when the projector is running and is controlled by a switch interlocked electrically with a corresponding control switch on the other projector giving full control from either machine.

The switching arrangement is such that the magnet is energised on the machine which is projecting. The Operating sequence is as follows:-

1. No.1 machine projecting magnet energised. Fire shutter held up by both magnet and governor. No.2. machine standing, magnet switch off.

2. No.2. projector started up prior to changeover. Its governor tends to lift fire shutter which cannot however rise because the changeover magnet is not energised.

3. Operation of the changeover control switch on either projector interchanges magnet connections, breaking the circuit of No.1 magnet and closing the circuit of No.2. magnet.

Accordingly No.2. shutter rises under the pull of No.2. magnet, No.1. safety shutter falls on account of the failure of the holding power of the No.1 magnet despite the fact that the governor of No.1. machine remains operative until this machine is switched off.

Notes on Operation

1. Stop pins are provided at top and bottom of safety shutter stroke. The shutter should not however actually strike on these or it may get bruised and fail to work freely. The stroke of the changeover mechanism is carefully adjusted so that the shutter movement is within the range of these pins and thus should not be disturbed.

2. The electrical interlock which gives control from either machine requires employment of a 2-way double pole switch at one projector and a 2-way single switch at the other. For standardisation double pole switches are fitted at both machines, one being used as a single pole only. See wiring diagram - machines being paired as sent out from the factory.

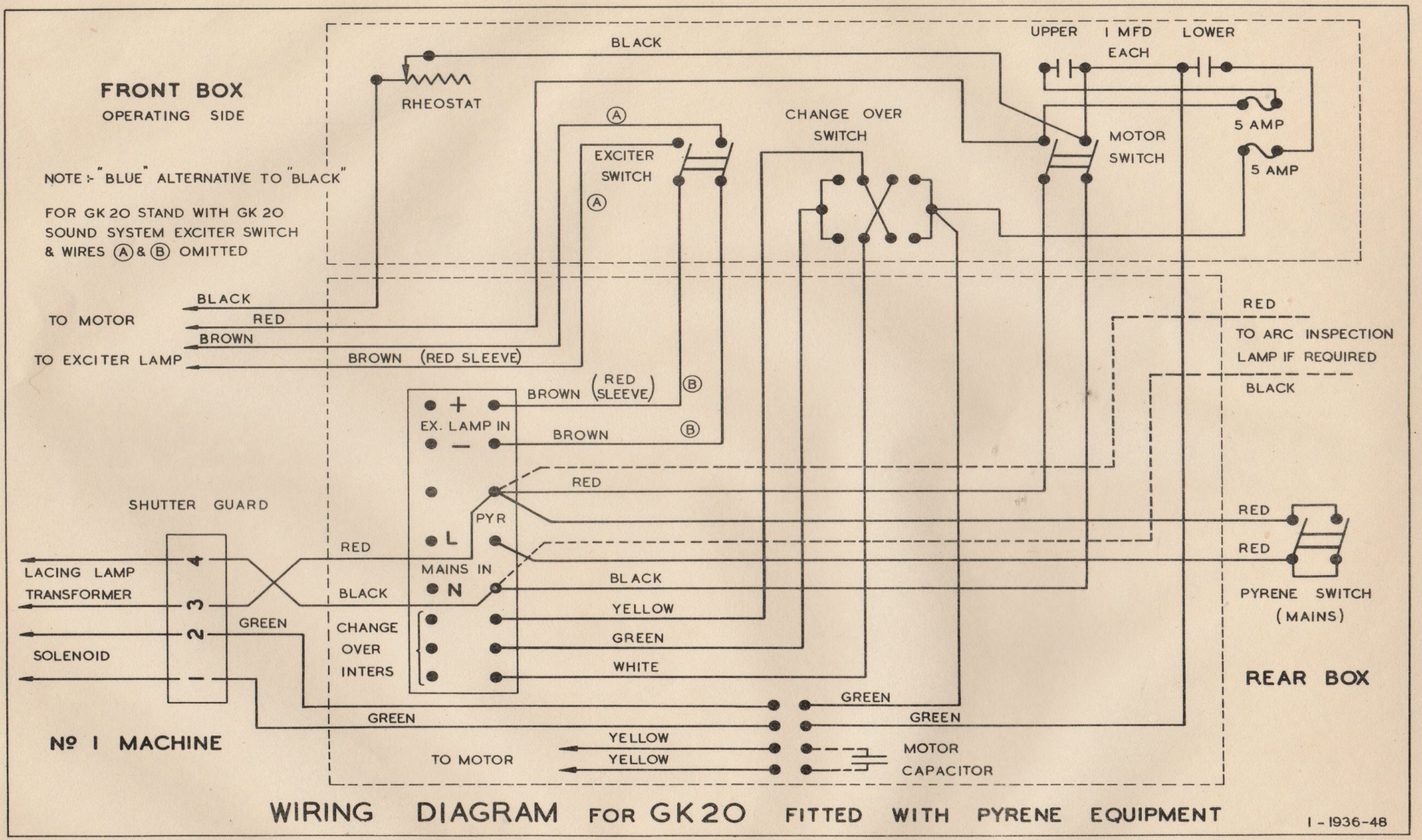

WIRING DIAGRAM FOR GK20 FITTED WITH PYRENE EQUIPMENT

I - 1936-48

PLATE Nº36

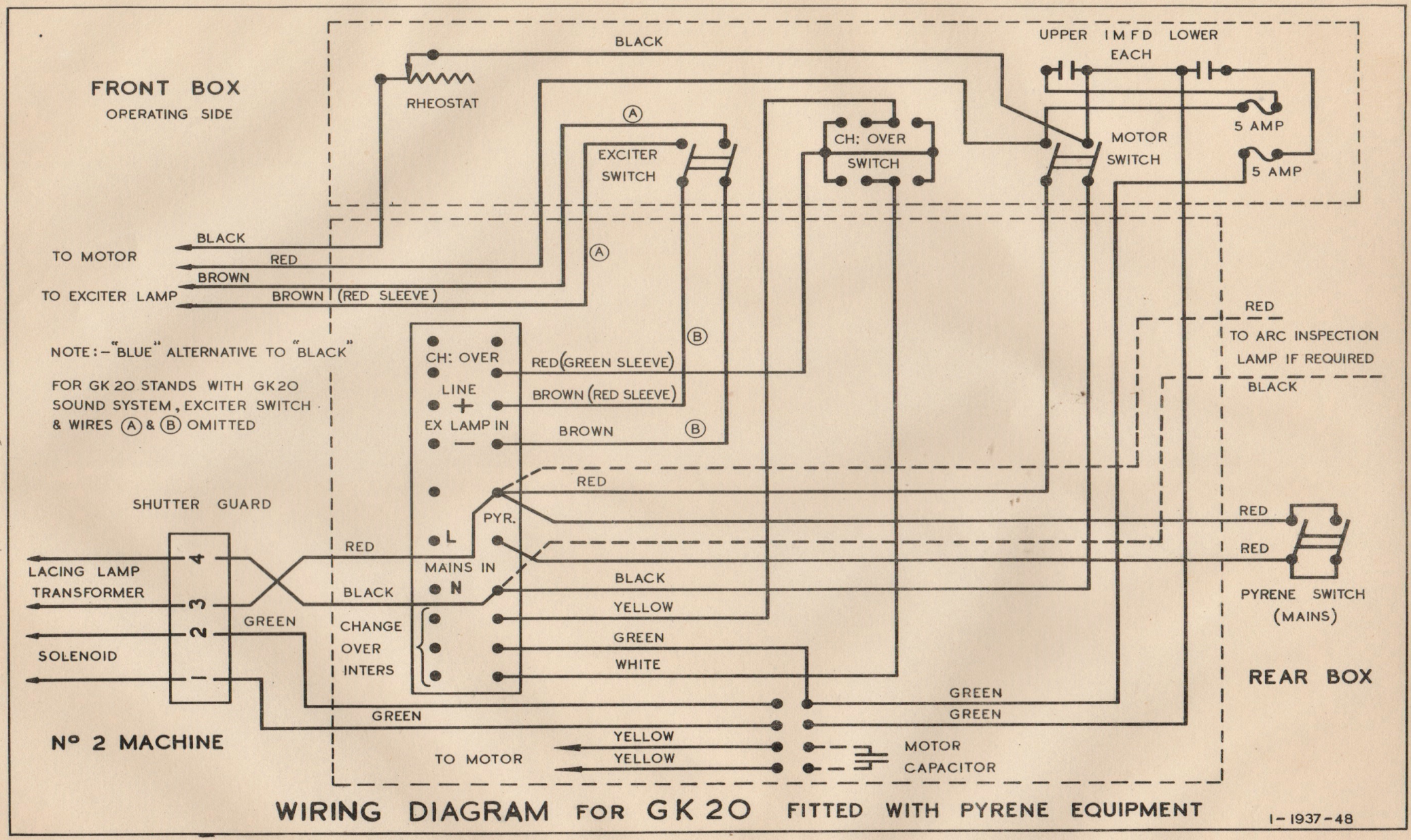

WIRING DIAGRAM FOR GK 20 FITTED WITH PYRENE EQUIPMENT

I-1937-48

PLATE Nº 37

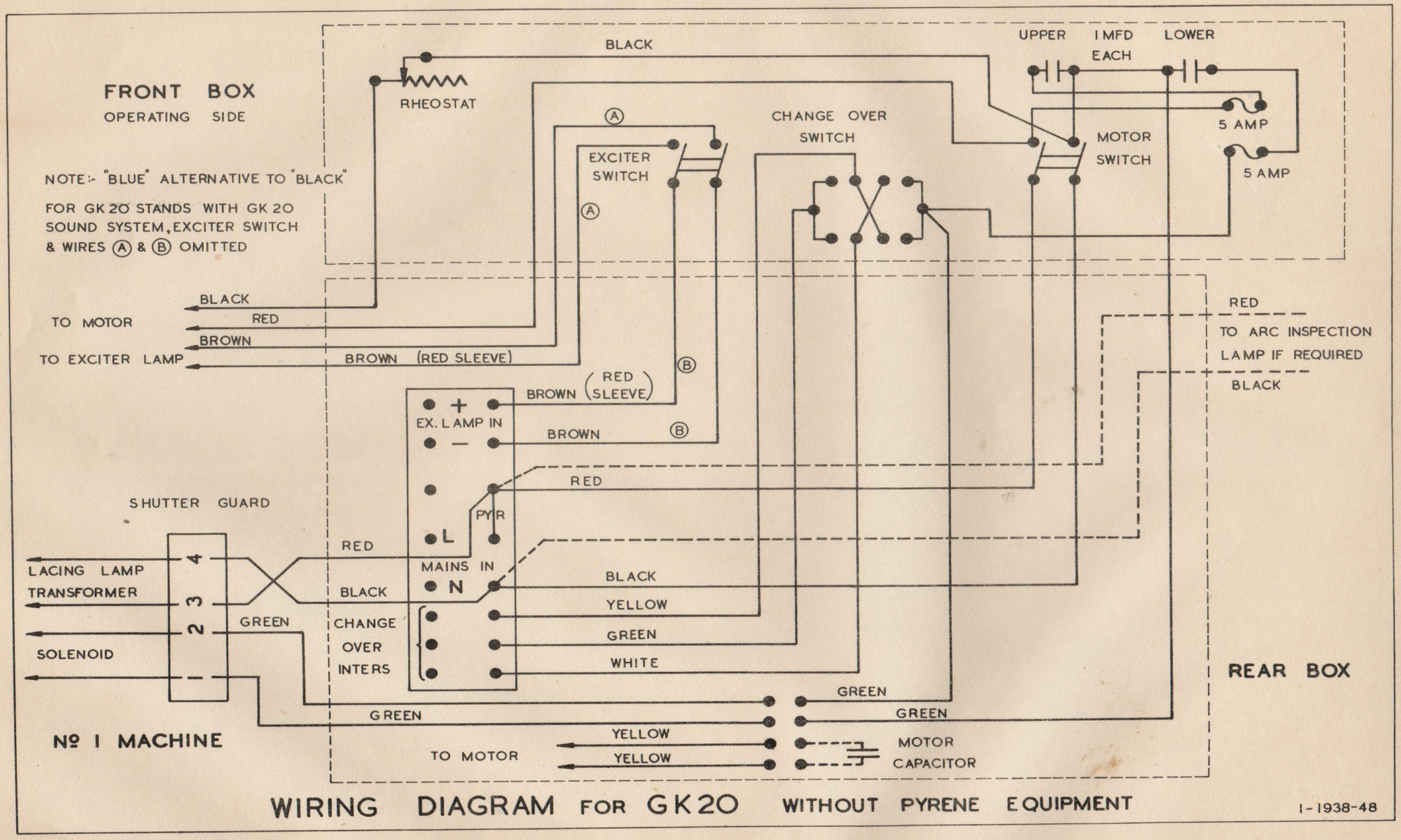

WIRING DIAGRAM FOR GK20 WITHOUT PYRENE EQUIPMENT

1-1938-48

PLATE Nº38

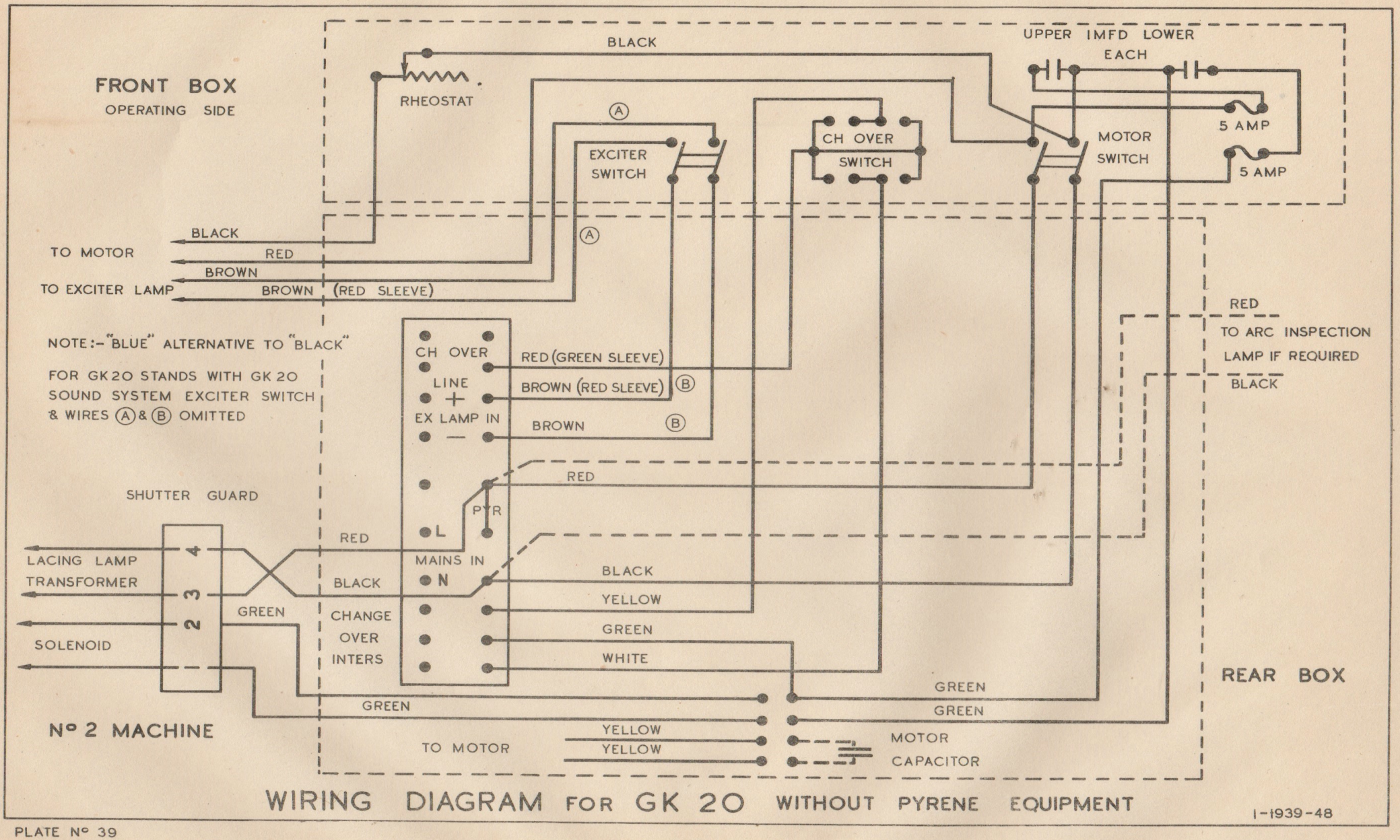

WIRING DIAGRAM FOR GK 20 WITHOUT PYRENE EQUIPMENT

1-1939-48

PLATE Nº 39

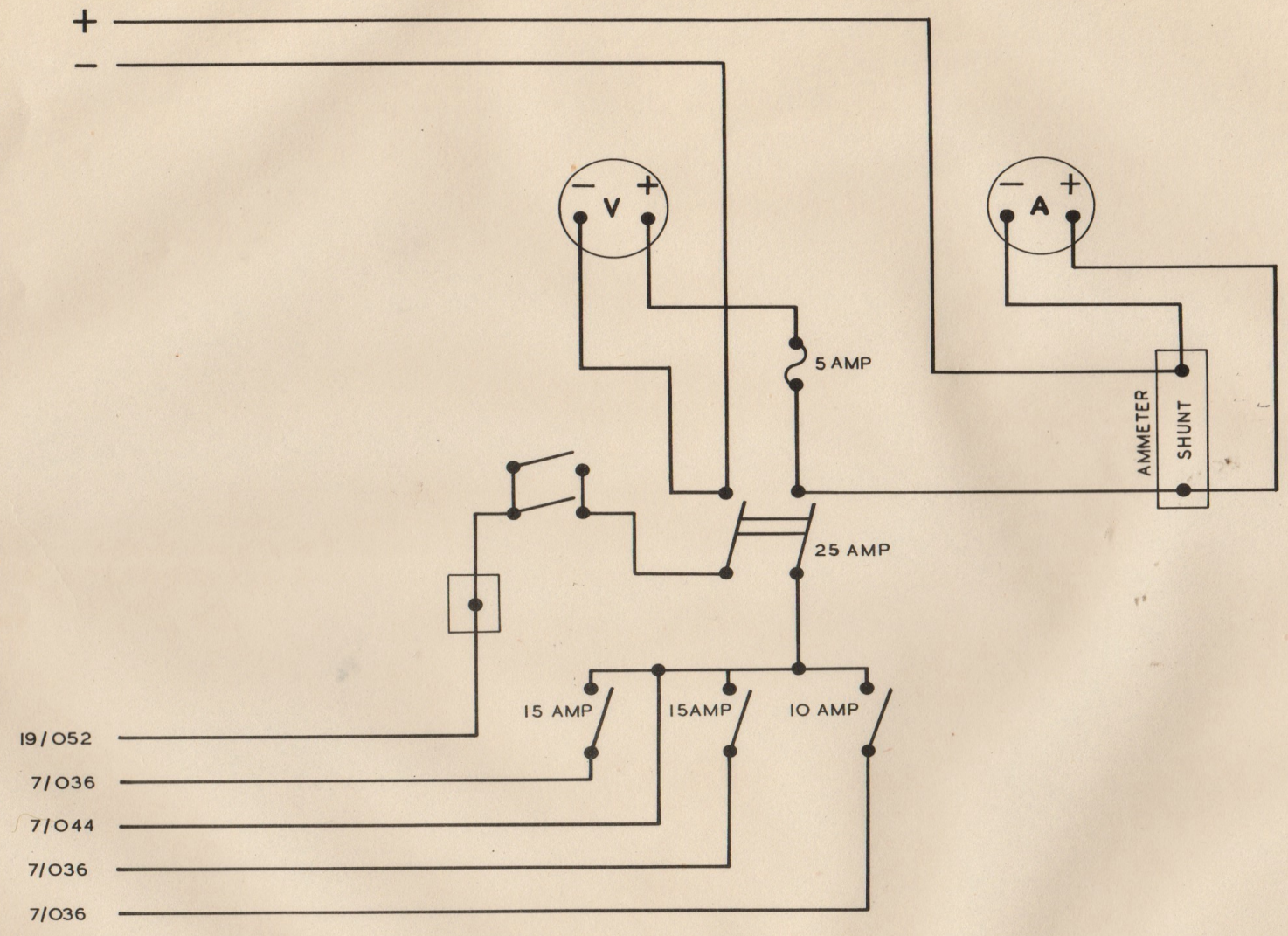

WIRING DIAGRAM FOR GK 19 & 20 ARC CONTROL BOX

1-1940-48

PLATE Nº 40

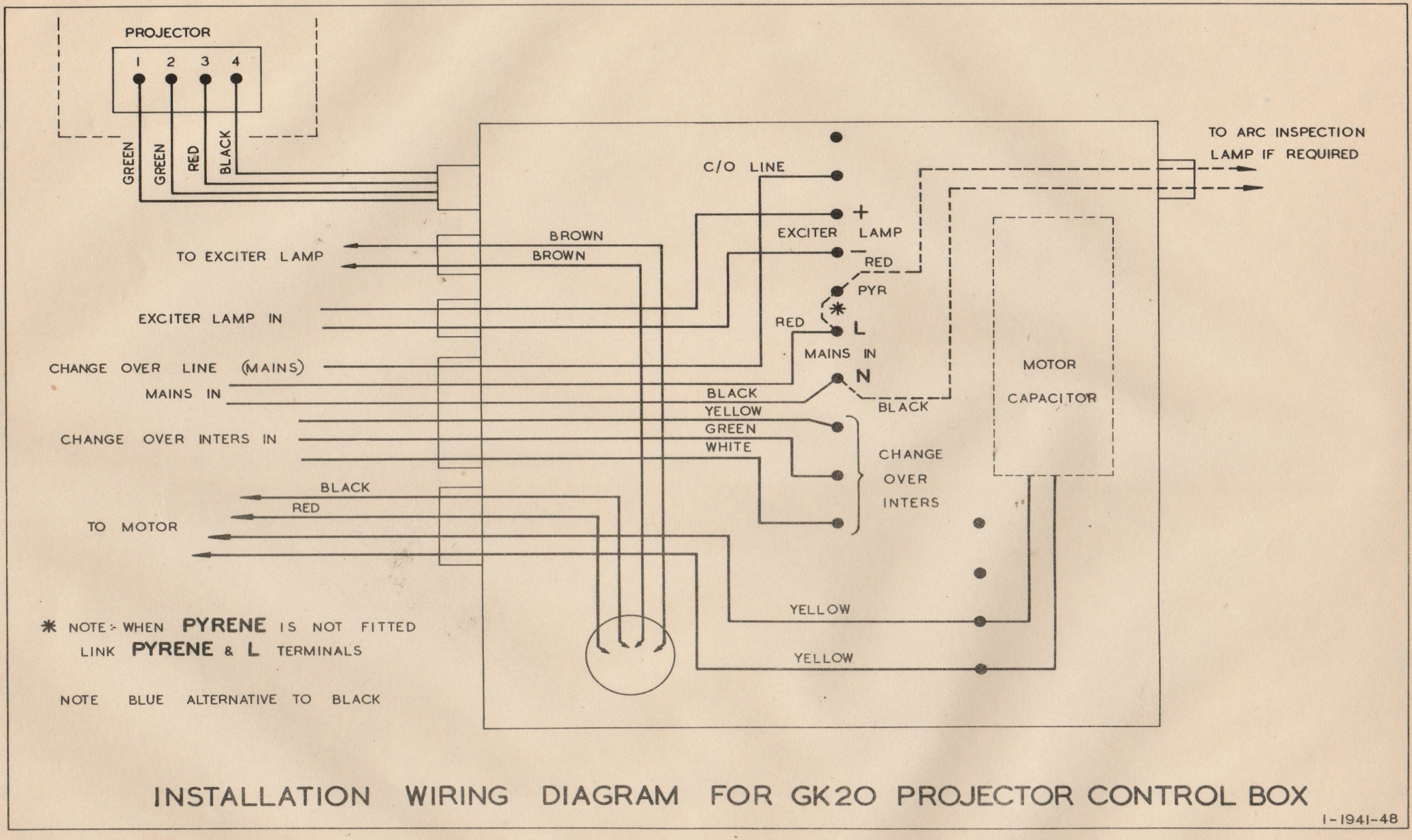

INSTALLATION WIRING DIAGRAM FOR GK20 PROJECTOR CONTROL BOX

I-1941-48

PLATE Nº 41

GAUMONT-KALEE 19 AND 20 EQUIPMENTS

Two new types of complete installations are to be added to the post war range, to be known as the Gaumont-Kalee 19 and the Gaumont-Kalee 20.

They will be offered as complete picture and sound equipments, although the projectors, arc lamps, and sound channel will be available as separate units.

These new models have been designed to meet the demand for equipments with the same standards of performance, dependability, and accessibility as have been set up by the Gaumont-Kalee 21, but at a lower figure, and, so far as the amplifier channel is concerned, with a lower power output. The new designs have passed prototype tests and will shortly go into production.

Difference between the 19 and 20 are confined to the projectors and stands. One type only of sound equipment covers both models.

The sound equipment, comprising soundheads, amplifier channel, and exciter lamp supply unit, is new and different in design from its bigger predecessor, the 21. It will be available in two versions, single channel and dual channel, and will be accompanied by four different sizes of loudspeaker, suitable respectively for halls with seating capacities of 500, 1000, 1200 and 1400 persons.

The complete equipment has been designed for direct operation from alternating current supplies of any periodicity from 40 to 60 cycles, and on any voltage between 95 and 130, or between 190 and 260.

The soundheads, type 378, have a single film sprocket, and instead of the enlarged image optical system of the 83 soundhead, a simple projected slit type of optical system is employed. The exciter lamp is of the prefocussed type, and exciter lamp consumption is 4 amperes at 8 volts.

Certain component parts of the 378 soundhead are identical to and interchangeable with parts in the 83 soundhead. The cast aluminium soundhead body, and the doors, are standard 83 components, as are the flywheel shaft and scanning drum, the sprocket shaft and bearing housing, the gears, and the belt pulley. Externally, with the doors closed, there is nothing to distinguish a 378 from an 83 soundhead. The same finish is used, midstone for exterior surfaces, porcelain white for the interior.

The soundtrack is scanned at the periphery of a drum stabilised by the same type of fluid flywheel that is used on the 83 soundhead, and the single film sprocket is isolated from disturbances originating from the bottom take up, or from a bent bottom spool, by a cushioning roller mounted on a spring loaded jockey arm.

Equally with the 83 soundhead, the 378 is of the type that from the maintenance angle can be kept in service for twenty years without the necessity for factory overhaul. All parts subject to wear are readily demountable and the replacement of worn parts by new does not entail any fitting nor the use of tools other than a screwdriver and spanner.

The soundhead can be mounted on a variety of different stands, but when it forms part of a Gaumont-Kalee 20 equipment the type 20 stand provides a horizontal platform on to which the soundhead is directly bolted. This platform is of sufficient length to accommodate the driving motor also, which is mounted immediately in front of the soundhead and coupled thereto by means of short dual endless V belts. The motor is resiliently mounted, and of ¼ h.p. Motors can be supplied for direct operation from 40, 50 or 60 cycles. The motor is protected by a cast aluminium cover through the operating side of which projects an inching knob.

The amplifier channel comprises a small preamplifier and a cabinet mounted power amplifier and exciter lamp supply unit. All valves used are of the internationally accepted and available octal base type.

The preamplifier, type 384, measures only 12 inches wide, by 12 inches high, by 7 inches deep and is mounted on the front wall of the operating enclosure in a position between the two projectors. The coaxial cell cables from the two soundheads are connected to terminals provided on the preamplifier, and the signal output, for connection to the power amplifier is a 500 ohm. line. The preamplifier houses the main volume control and the film disc, microphone switch.

Two 6SL7GT (or Mullard ECC35) double triodes are employed. These are of the type where each triode section has its own cathode, permitting different values of cathode bias resistance to be used on the two triode sections contained within the one envelope. The circuit utilises the four sections as four separate triode stages, each stage correctly biased for the function it discharges.

With the selector switch in the "FILM" position, all four stages are in use. The frequency response of the first stage, which is only used on "FILM" input, is designed to correct the loss introduced at high frequencies by the cell leads. The second stage, to which disc and microphone inputs are connected when the selector switch is in the appropriate position, is a plain gain stage, as is the third stage.

A 21 position, click action, main volume control follows the third stage, and is in turn followed by the fourth stage, which gives no amplification but is a cathode follower bringing the output impedance down to 500 Ohms.

The complete preamplifier is assembled on a chassis which is hinged along its bottom line to the case which encloses it. In the normal closed operating position only the two controls, film, disc, microphone switch, and volume control are visible. By withdrawing one knurled headed screw, the front cover can be removed, which gives access to the two valves. By withdrawing two screwdriver slotted screws, the whole chassis can be tipped forward, through 180 degrees, when access is obtained to the wiring and components. The amplifier will continue to function in this upside down position, permitting of inspection under working conditions with inputs and outputs connected.

A remote volume control, for mounting in a position on the front wall adjacent to the right hand machine, is provided. The linkage with the main volume control is by a sheathed, flexible cable.

H.T. and heater supplies to the preamplifier are obtained from the power amplifier.

The power amplifier and exciter lamp supply unit are contained in a solidly constructed sheet steel cabinet 34 inches high by 18 inches wide by 10 inches deep. If the layout of the operating enclosure makes it desirable, this cabinet can be mounted immediately below the preamplifier, between the two machines, making sensibly one unit of the complete amplifier channel. Alternatively, the cabinet can be mounted in any other position in the operating enclosure. In extreme cases it would be quite practicable to mount the cabinet outside the operating enclosure altogether.

The power amplifier employs two 6SL7GT double triodes, three 6L6G or KT66 beam tetrodes (or three EL37 pentodes), and a 5U4G (or U52) full wave rectifier.

The first double triode is used as two separately biased triode stages of amplification. The second double triode has plates, grids, and cathodes strapped and is used as a single triode phase inverter to feed the power output stage, which comprises two 6L6G's in push pull. The third 6L6G is a separate output stage for the monitor speaker. The power output to the stage speakers is 18 watts with total harmonic distortion not exceeding 1½%. The correct output load is 10 ohms. A switch, which substitutes a dummy load for the speaker load, permits the stage speakers to be cut off without interfering with the monitor speaker. The output to the monitor, which has an independent volume control, is 2½ watts.

Control of frequency response is by an adjustable network between the plate circuit of the first triode stage and the grid of the second triode stage. Bass and treble response are independently variable.

The complete power amplifier and power supply unit is on one vertically mounted chassis which occupies the upper two thirds of the cabinet. All the valves, transformers, smoothing condensers and controls are on the front of this chassis. The terminals of all these front mounted components project through to the back of the chassis where all the wiring is disposed in one plane. The chassis is hinged at the bottom, and without detaching any wiring it can be dropped forward until it rests in a horizontal position, where it is securely held. The wiring and the minor components at the back of the chassis are then conveniently displayed for inspection, or attention with a soldering iron. The performance of the amplifier is not interrupted when in this horizontal position, and an elusive intermittent fault can be quickly traced.

Either one of two types of mains transformers is supplied. Otherwise identical, one has a primary winding tapped for any voltage between 95 and 130 volts, 40 to 60 cycles, the other has a primary for voltages between 190 and 260 volts, 40 to 60 cycles. The secondaries in either case are a 480-0-480 high tension winding, two 6.3 volt windings, one for the preamplifier valves and one for the power amplifier valves, a 5 volt winding for the rectifier filament, and a 20 volt winding for the dry metal rectifier in the exciter lamp unit. The power amplifier with 95-130 volt mains transformer is known as type 415, and with 190-260 volt transformer, as type 369.

The smoothing circuit following the full wave 5U4G high tension rectifier is of the choke input type, thereby eliminating the undesirable stress across the first condenser inseparable from a condenser input filter. The smoothing condensers are of the dry electrolytic type, but due precautions have been taken to protect the rest of the circuit against possible condenser failure. In series with each condenser is a fuse, shunted by a resistance. When the equipment is first installed, which may be six months or more after the final factory test, the condenser fuses are withdrawn before the equipment is switched on. The surge current which would flow, with possible damage to the rectifier valve or mains transformer, due to the condensers requiring to be "re-formed", is restricted by the series resistances to a safe value. After allowing ten minutes for the condensers to re-form, the current is switched off, the fuses replaced, and the equipment is ready for normal operation. If, after long service, the condenser fails by developing a high value of leakage current, the fuse will blow and safeguard other components.

The exciter lamp supply unit, type 416, has a smooth D.C. output of 8 volts 4 amperes, obtained from a tropically rated Westinghouse selenium rectifier. The smoothing circuit uses two chokes and two 1000 mfd. dry electrolytic condensers. The same fuse and resistance protection in series with these condensers is afforded as is used with the high tension smoothing condensers, and on first installation the exciter supply unit should be run for ten minutes with the condenser fuses drawn.

The components of the exciter supply unit are assembled on a shallow vertically mounted tray which occupies the lower third of the cabinet. By undoing one knurled headed screw the front cover can be removed, which gives access to the pre-set resistor which is used to adjust exciter lamp voltage. By taking out two screwdriver slotted screws the complete tray can be withdrawn for examination or repair.

Sound changeover is effected by switching the exciter lamps, two switches being provided for mounting in positions convenient to the two operation positions. The switch circuit is such that when one lamp is lighted by smoothed D.C., the other lamp is preheated by approximately 2 amperes A.C. obtained via a series resistance from the 6.3 volt heater winding for the power amplifier valves. In the event of failure of the D.C. supply, the series resistance in the 6.3 volt A.C. supply can be strapped out and the performance continued, without any modification of the switching or wiring, with the exciter lamps fed with A.C. In this emergency condition a little A.C. hum will be audible from the speakers. The reduced voltage as compared with D.C. will necessitate running some three steps higher on the fader.

If, during programme hours, to permit of some adjustment being made, it is necessary to light the exciter lamp in the soundhead not actually in use, this can be done by strapping out the series pre-heating resistance and shielding the photo cell from the modulated light.

SOUNDHEAD TYPE 378

When the original design was being considered, it was proposed that a prefocussed type of exciter lamp should be used. Experience of prefocussed lamps showed that there was insufficient uniformity between specimens, and that even if initially the filament of a particular lamp lined up optically, it was necessary to provide adjustment to allow for filament sag with age. Accordingly, a normal type of 8 volt 4 ampere lamp was adopted, and an adjustable exciter lamp holder provided. All 378 soundheads issued have an adjustable holder, of a similar, but not identical type to that fitted in the 83 Soundhead. The holder gives both vertical and horizontal movement of the lamp.

There is very great similarity between the 83 and 378 Soundheads. The two types are in fact variations of one basic design. The same method of drive on to a dual Vee belt pulley is used in both models, and the various types of motor used with the 83 Soundhead to cope with different voltages and periodicities are equally available and suitable for the 378 Soundhead.

The method of driving the picture projector mechanism is identical in the two types, and all projector adaptations designed for the 83 Soundhead are available and suitable for the 378 Soundhead. As between the two models, all external dimensions, and such material points as fixing centres and drive centres, are identical. The substitution of an 83 Soundhead by a 378 in any theatre installation would entail no more than the removal of the 83 and the fitting in its place of the 378. No modification to the rest of the equipment would be required.

Having stressed the similarity between the two Soundheads, it will be useful to itemise the points of difference.

Where the 83 employs the special feature of an optical system which projects a six times magnified image of the soundtrack on to a window carrying the mechanical scanning slit, the 378 employs a normal type of optical system. The horizontally mounted optical tube projects the scanning light on to the emulsion side of the overhung edge of the film on the scanning drum, and a mirror assembly, mounted partly within the scanning drum, picks up the light modulated by the soundtrack and redirects it downwards and backwards to a photocell contained in a cover immediately below the optical tube.

To focus the optical system, the 2 B.A.Allen clamping screw is loosened, and the chromium plated sleeve rotated by means of a tommy bar in one of the ring of holes. As with any Soundhead, the most positive method of obtaining optimum focus adjustment is by employing an endless loop of 5000 or 8000 cycle test film, or several hundred feet of the same film laced through from top to bottom Spoolbox, and with a meter attached to the output terminals of the power amplifier, adjust focus whilst the machine is running until a maximum meter reading is obtained. A less satisfactory method is by observation of the "iris" effect at the cathode of the P.E.Cell.

Slit azimuth (Horizontality of slit) is adjusted at the works and sealed.

The complete optical unit assembly, comprising lens tube and mirror assembly, is carried on a single light alloy casting which can be detached from the scanning plate by withdrawing three screws. With the casting detached from the plate it is possible to withdraw the lens tube from its 'U' shaped carriage. With the 2 B.A.Allen screw loosened off, downward rotation of a tommy bar in the ring of holes will move the actual lens tube, which normally is hidden by the chromium plated sleeve, back until it can be slipped out. The lens tube is carried on a chromium plated flange nearly two inches in diameter, and rivetted into this flange is a substantial pin. The pin is part of the azimuth adjustment, and permits of the whole lens tube, which carries within it the slit mask, being rotated the necessary few degrees by the adjusting screw. When in its normal working position the pin is butting up against a vertically mounted plunger with a strong spring. This plunger is fitted into the bearing block of the lens tube carriage from underneath, and rotation of the visible screw driver slotted end of the plunger will have no effect as its setting is determined and sealed at the works. The azimuth adjusting screw is fitted into the bearing block from the top, and only the sealing is visible.

When returning the lens tube to its carriage, hold the chromium plated sleeve in its working position, with the tommy bar holes nearest the mirror assembly, check that the two plain and one spring washer are in place on the lens tube (the spring washer should be the one nearest the large flange), and gently push the lens tube in until the threads on the tube engage with the threads on the sleeve. See that the chamfered end of the pin is correctly entered between the spring plunger and the azimuth locking screw, and then rotate the sleeve in an upward direction, thus drawing the lens tube into position.

It is not essential to detach the casting which carries the elements of the optical system in order to withdraw the lens tube, but the job is rendered easier by so doing, and at the same time it permits the lenses of the mirror system being inspected and cleaned if necessary. The surfaces of the lenses in both the lens tube and the mirror assembly are bloomed, and cleaning should be done very gently, with a clean, soft piece of silk.

The optical assembly, together with the exciter lamp holder, the scanning drum, shaft, and flywheel, the layon roller, the guide entry roller, and the photo cell and cover, are carried on a scanning plate which is rubber mounted at three points to the soundhead body proper.

The photo cell employed is a type GS16, CMG22, or CG8, as used in the 83. These cells are mounted on a standard British 4 pin base, but the cell holder can be exchanged for an American 4 pin holder to accept an American type 923 cell.

The 378 Soundhead employs one film sprocket only. The sprocket is a holdback type, and its shaft, bearings, and bearing housing are standard 83 parts. The single sprocket occupies the same position as the upper of the two sprockets in an 83 Soundhead, but it should be noted that where with two sprockets the upper one is a feed type, part 83005, with a single sprocket, it is a hold back type, part 83006.

In place of the lower sprocket of the 83 Soundhead, the 378 has a jockey roller on a spring loaded arm, located in the same bore that accommodates the lower sprocket bearing housing in the 83. The pivoted arm gives the jockey roller 2½ inches of effective travel and this enables it to deal with large amplitudes of film snatch. The geometry of the design is such that with film held stationary by the film sprocket, it is necessary to pull 4 inches of film into the lower spoolbox to cause the jockey roller to move through its permissible travel of 2½ inches.

It is, of course, desirable that the tension on the friction disc of the bottom take up should be adjusted to give a sweet action, and bent or warped spools should not be used, but the roller on its swinging arm, in conjunction with the single film sprocket, will absorb disturbances of considerable magnitude and prevent their being reflected back to the scanning point.

As the 378 Soundhead has only one film sprocket, it has two gears and an idler chain sprocket less than the 83 Soundhead. Where in an 83 the non operating side of the upper film sprocket shaft carries two gears and the driving chain sprocket for the bottom take up, on the 378 there is only one gear and the chain sprocket. The smaller gear, part 83028, is not required, as there is no lower sprocket shaft for it to drive. Having no lower sprocket shaft, the 378 Soundhead has no gear part 83030, and no idler chain sprocket part 83031.

Because there is only one sprocket shaft requiring lubrication, the oil pipe assembly has only one oil pipe.

The lay-on roller assembly is built up entirely of 83 parts with the exception of the bearing arm, which is part 378010.

PROCESS.

ROLLER PIVOT 83088 FIXED TO BRACKET BY 1- Nº 2 B.A x 5/16" CH.HD. D.N.P. SCREW (SCR 9/1051) AND 1- Nº 2 B.A. D.N.P. WASHER (WAS 9/403)

SPROCKET SHAFT 83081.

LOCKING COLLAR 83083 FIXED BY 1- Nº 2 B.A x 5/16" SOCKET HD. GRUB SCREW. (DAU. 64)

ROLLER AND ARM ASSY. 83096 FIXED TO PIVOT BY END SCREW. 83097.

SPRING 83101 FIXED WITH 1- Nº 4 B.A. x 1/4" CH.HD. D.N.P. SCREW. (SCR. 9/1045)

MOUNTING BRACKET 83087.

SPROCKET SHAFT BEARING 83082 FIXED TO BRACKET BY 3- Nº 4 B.A x 5/16" CH. HD D.N.P. SCREW (SCR 9/1052)

STRIPPER 83106 FIXED BY 1- Nº 4 B.A x 1 3/8" CH.HD. D.N.P. SCREW (SCR. 9/1129).
NOTE. STRIPPER CAN BE FIXED IN EITHER UP OR DOWN POSITION:- WHEN USED FOR FEED - DOWN POSITION TO BE USED - WHEN USED FOR HOLD BACK - UP POSITION TO BE USED.

SECTION A.A.
WITH FRONT COMPONENTS REMOVED

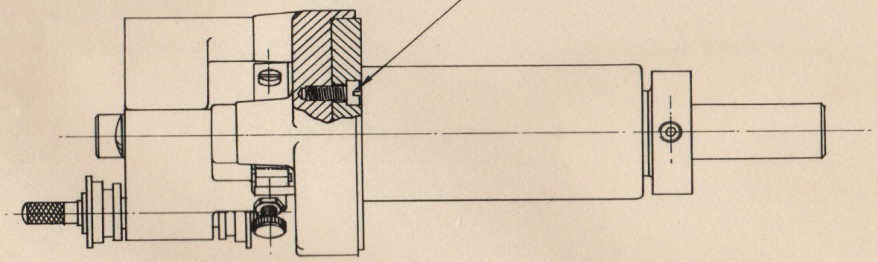

MODIFICATIONS.

SCALE FULL SIZE.

▽ = NORMAL MACHINED FINISH.
▽▽ = GROUND OR FINE MACHINED FINISH.
▽▽▽ FINE GROUND FINISH WITHOUT WHEELMARK

USED ON ASSY Nº 83 000.

TOLERANCES UNLESS STATED
ON DECIMAL DIMS. ±
ON OTHER DIMS ±

DRAWN BY. J.P. DATE. 11. 10. 46.
CHKD. BY. APPD. BY.
MATERIAL.
FINISH.

B. A. F. LTD.

SPROCKET SHAFT UNIT.

PART. NUMBER. 83003

SPROCKET SHAFT UNIT

Drawing No. 83C

Details	Part No.
Bracket Mounting	83087
Bearing Sprocket Shaft	83082
Collar Locking	83083
Pivot Roller	83088
Roller & Arm Assembly See.Drg.	83096
Sprocket Shaft	83081
Spring	83101
Stripper	83106
Screw	83097
" 2 BA x 5/16" CH.HD.DNP	9/1051
" 2 BA x 5/16" Socket HD.Grub	64
" 4 BA x 5/16" CH.HD. DNP	9/1052
" 4 BA x $\frac{1}{4}$" CH.HD. DNP	9/1045
" 4 BA x $1\frac{3}{8}$" CH.HD. DNP	9/1129
Washer 2 BA	9/403

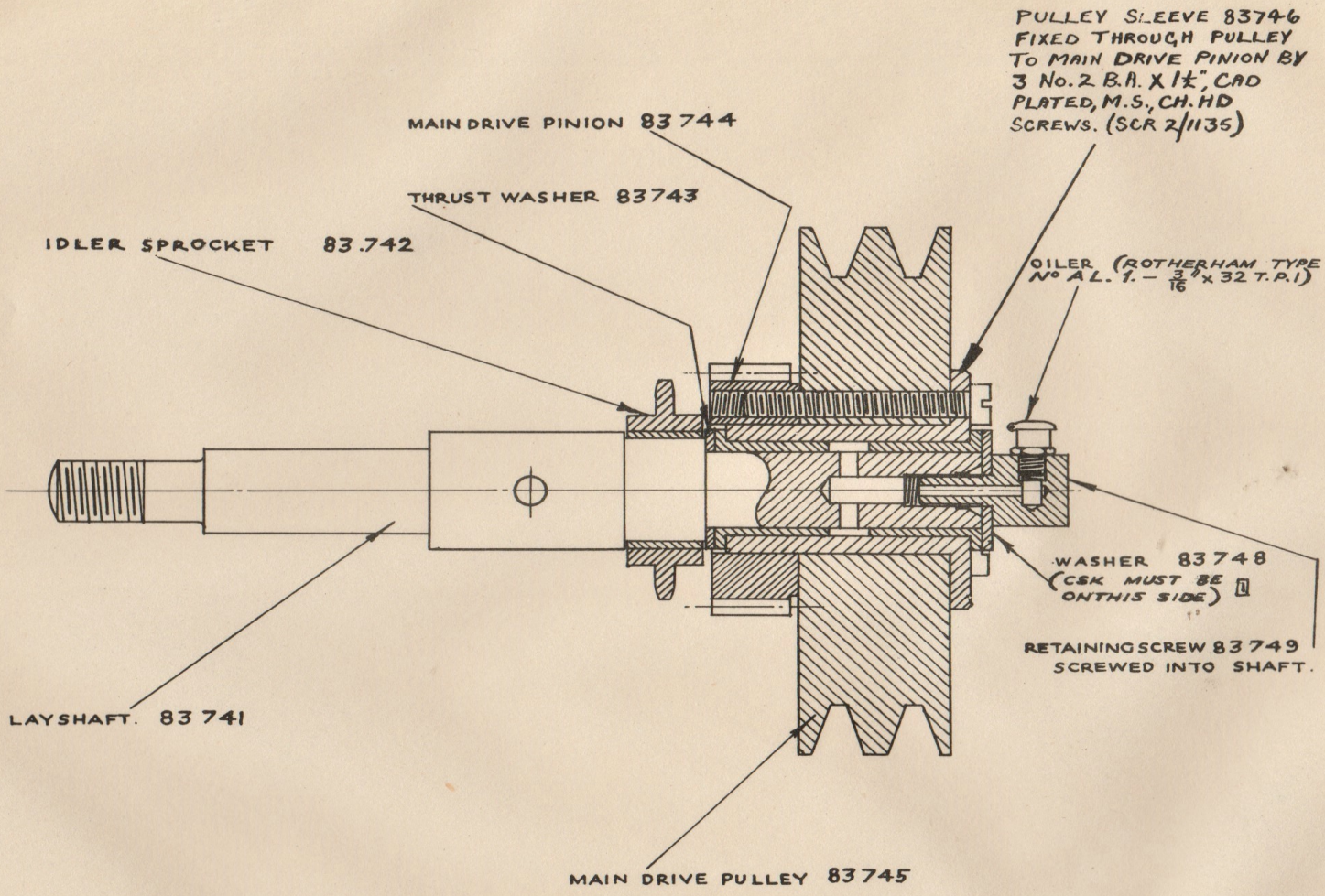

PROCESS

BRITISH ACOUSTIC FILMS LTD.

MODIFICATIONS

1	NOTE ADDED. 15.1.47. J.P.

SCALE FULL SIZE

$\overline{V}$ = NORMAL MACHINED FINISH

$\overline{VV}$ = GROUND OR FINE MACHINED FINISH

$\overline{VVV}$ = FINE GROUND FINISH WITHOUT WHEELMARKS

USED ON ASSY. No. 83 000.

TOLERANCES, UNLESS STATED,
ON DECIMAL DIMS. ±
ON OTHER DIMS. ±

DRN. BY J.P. DATE 25.7.46.

CKD. BY APPD. BY

MATERIAL —

FINISH —

LAYSHAFT ASSEMBLY

PART NUMBER 83 012.

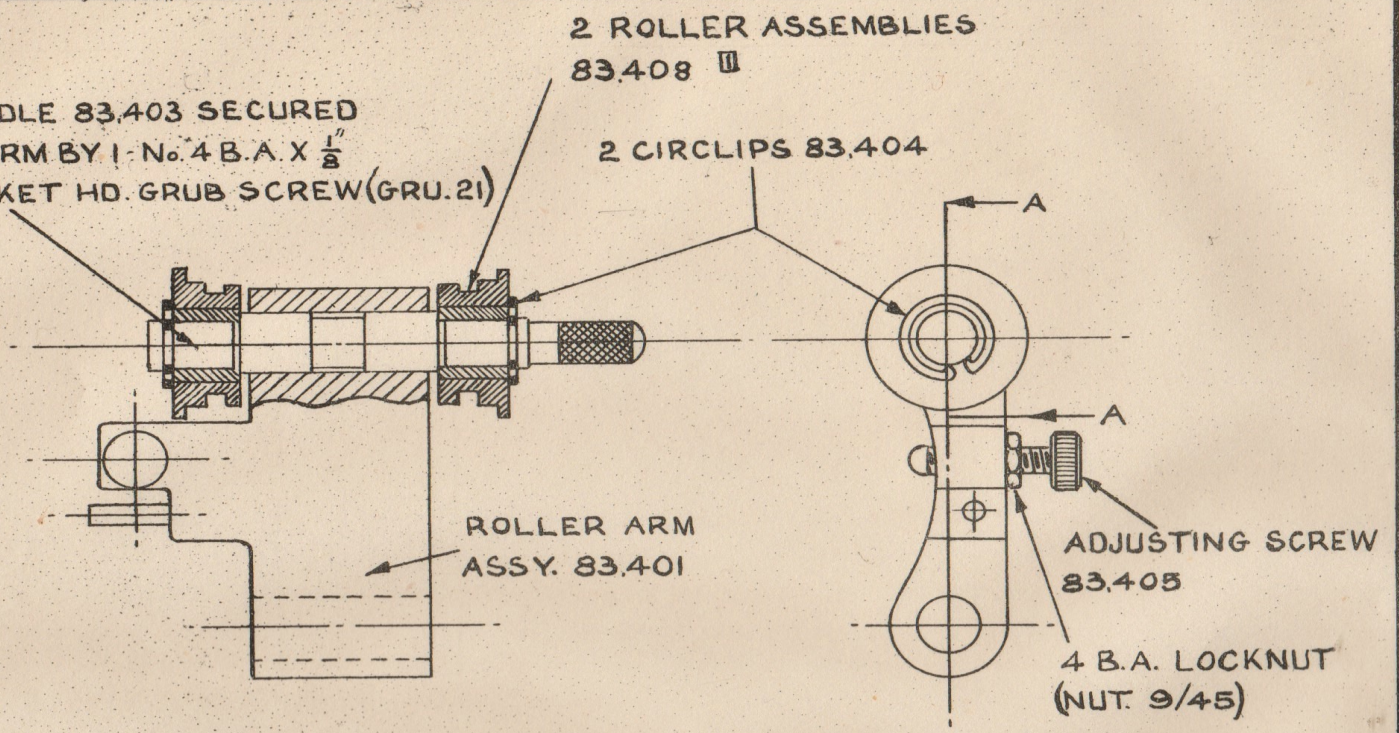

PART SECTION A A

PROCESS

SCALE FULL SIZE

▽ = NORMAL MACHINED FINISH

▽▽ = GROUND OR FINE MACHINED FINISH

▽▽▽ = FINE GROUND FINISH WITHOUT WHEELMARKS

BRITISH ACOUSTIC FILMS LTD.

MODIFICATIONS

ROLLER ARM REF. WAS SHOWN 83.641 F.H. 31.10.46	
REDRAWN. TRC'G. MISSING. 5.6.47 D.D.	
WAS 83402. 16.7.47. J.P.	
II	

USED ON ASSY. No.

TOLERANCES, UNLESS STATED,
ON DECIMAL DIMS. ±
ON OTHER DIMS. ±

DRN. BY J.P. DATE 5.10.46

CKD. BY APPD. BY

MATERIAL

FINISH

SPROCKET ROLLER & ARM ASSY.

PART NUMBER 83.096

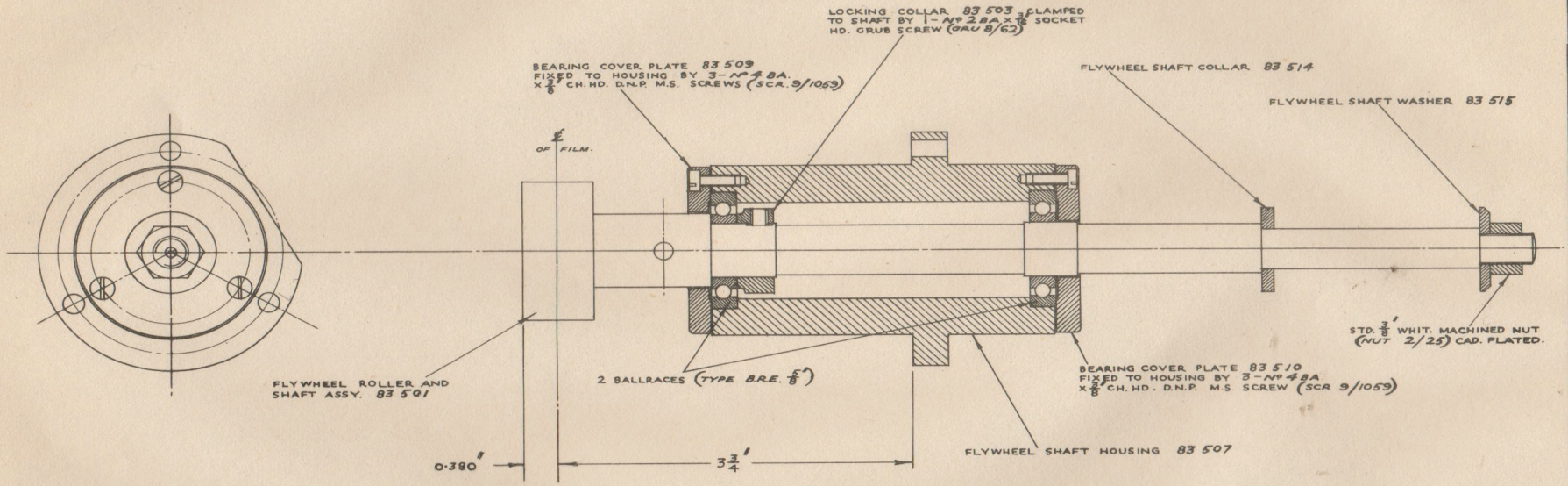

PROCESS

BRITISH ACOUSTIC FILMS LTD.

MODIFICATIONS

SCALE FULL SIZE

▽ = NORMAL MACHINED FINISH

▽▽ = GROUND OR FINE MACHINED FINISH

▽▽▽ = FINE GROUND FINISH WITHOUT WHEELMARKS

USED ON ASSY. No. 83 021.

TOLERANCES, UNLESS STATED, ON DECIMAL DIMS. ± — ON OTHER DIMS. ± —

DRN. BY J.P. DATE 27.7.46.

CKD. BY APPD. BY

MATERIAL —

FINISH —

FLYWHEEL SHAFT AND HOUSING ASSEMBLY

PART NUMBER 83 156.

FLYWHEEL SHAFT AND HOUSING ASSEMBLY

Drawing No. 83156

Details	Part No.
Flywheel Roller and Shaft Assembly	83501
Locking Collar	83503
Flywheel Shaft Housing	83507
Bearing Cover Plate	83509
Bearing Cover Plate	83510
Flywheel Shaft Collar	83514
Flywheel Shaft Washer	83515
Ballrace (2)	(BRE ⅝")
2 BA x 3/16" Socket HD.Grub Screw	GRU 8/62
4 BA x 3/8" CH.HD. DNP MS.Screw (6)	SCR 9/1059
Std. 3/8" Whit. Machined Nut. Cad.Plated.	(NUT 2/25)

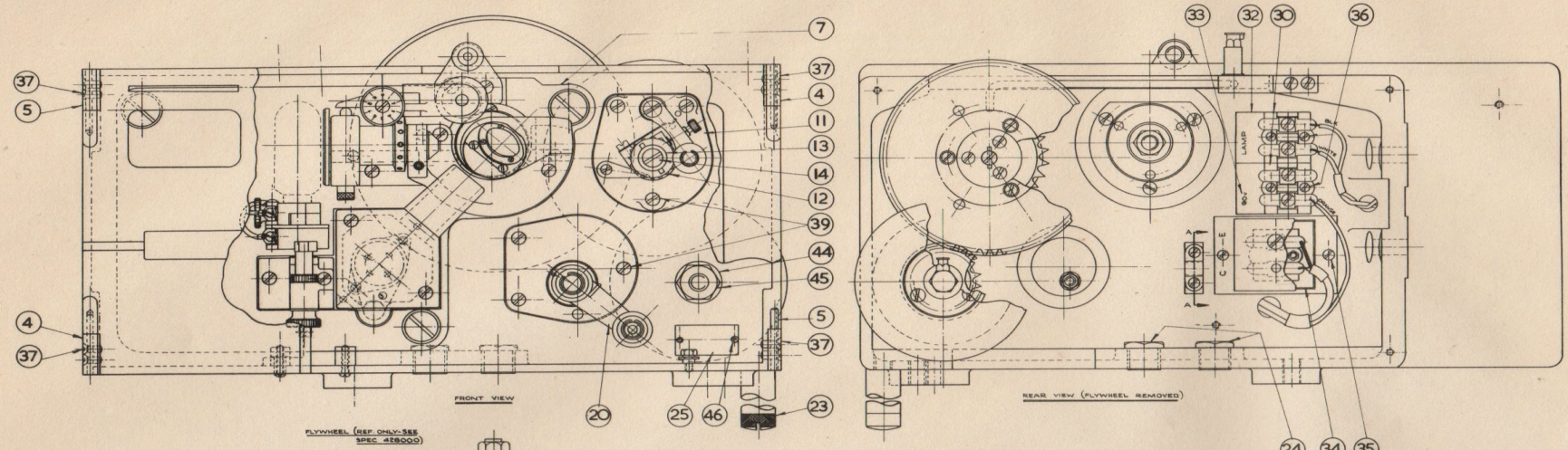

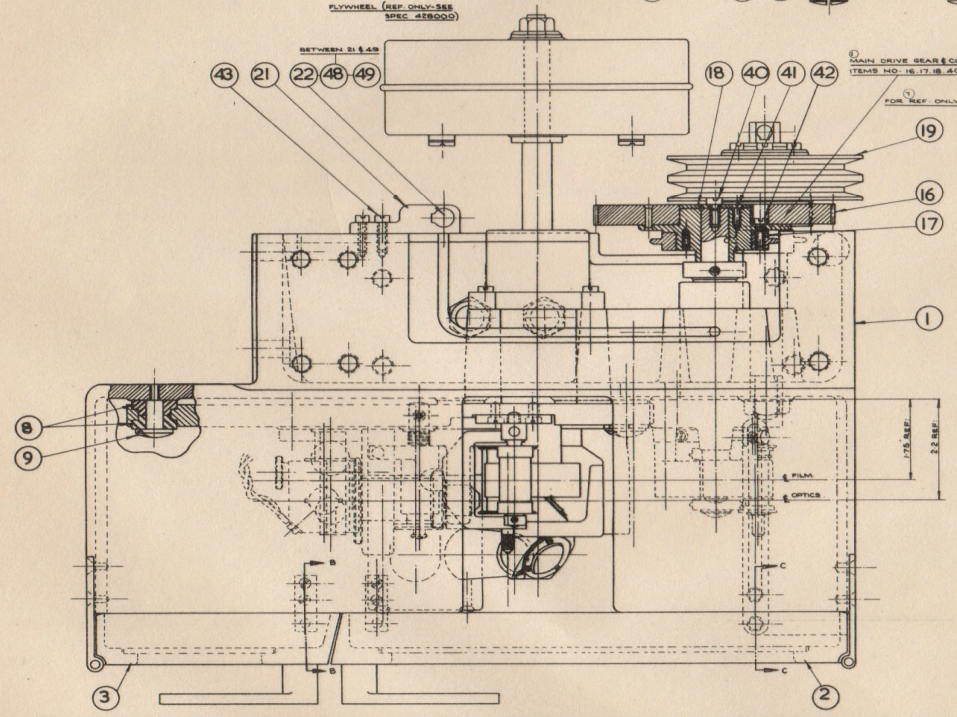

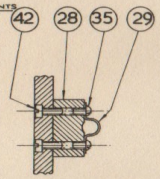

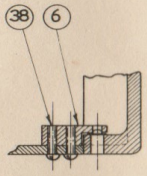

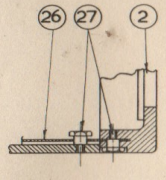

ITEM	PART Nº	DESCRIPTION	FINISH	MATERIAL	Nº OFF
60					
59					
58					
57					
56					
55					
54					
53					
52					
51					
50					
49	83053	OILER MTG.			1
48	83052	LEATHER WASHER			1
47					
46	21/99008	R.H. DRIVE SCR. 0.0-10/16 LG. TYPE 17	NICKEL PLATE	M.S.	2
45	NUT 3/16B	7/16 B.S.F. HEX. NUT	NICKEL PLATE	M.S.	1
44	WAS 3/16B	7/16 B.S.F. PLAIN WASHER	NICKEL PLATE	M.S.	1
43	SCRS/10BA	2 B.A. CH. HD. SCR. x 5/8" LG.	NICKEL PLATE	M.S.	2
42	SCRS/10BA	4 B.A. CH. HD. SCR. x 1/2" LG.	NICKEL PLATE	M.S.	5
41	SCK/8B	4 B.A. CSK. HD. SCR. 5/8 LG.	NICKEL PLATE	M.S.	5
40	SCRS/10BA	2 B.A. CH. HD. SCR. x 1/2 LG.	NICKEL PLATE	M.S.	1
39	SCRS/10BA	2 B.A. CH. HD. SCR. x 3/16 LG.	NICKEL PLATE	M.S.	6
38	SCR3/2BA	4 B.A. R.D. HD. SCR. x 5/16 LG.	NICKEL PLATE	M.S.	2
37	SCK1/8B	2 B.A. CSK. HD. SCR. x 3/16 LG.	NICKEL PLATE	M.S.	6
36	SCR3/2BA	4 B.A. RD. HD. SCR. x 5/16 LG.	NICKEL PLATE	M.S.	4
35	SCR3/2BA	4 B.A. R.D. HD. SCR. x 1/16 LG.	NICKEL PLATE	M.S.	4
34	83061	SCREENED TERM. BLOCK			1
33	83048	DESIGNATION PLATE			1
32	60006	DESIGNATION PLATE			1
31					
30	51004	TERMINAL BLOCK ASSY			2
29	CRA 725	CABLE CLIP	NICKEL PLATE	RUBB CONTREY NO. 725	1
28	69244	DISTANCE PIECE			1
27	83080	SHOULDER SCREW			2
26	83079	DOOR STAY			1
25	378044	NAMEPLATE			1
24	CBM 3/16	3/16 SMITHSBORE CON BUSH (HD)		DIECASTING	2
23	83054	OIL COLLECTOR ASSY.			1
22		OILER		ROTHERHAM TYPE AL 1	1
21	378060	OIL PIPE ASSY			1
20	378024	JOCKEY ROLLER ASSY			1
19	83012	LAY SHAFT ASSY			1
18	83032	KEY WASHER LARGE			1
17	83055	CHAIN SPROCKET			1
16	83027	MAIN DRIVE GEAR			1
15					
14	83097	END SCREW			1
13	83007	KEY WASHER			1
12	83.006	HOLD BACK SPROCKET			1
11	83.003	SPROCKET SHAFT ASSY			1
10					
9	83022	MOUNTING SCREWS			3
8	83023	MOUNTING CUSHIONS			6
7	378001	SCANNING UNIT ASSY			1
6	83077	CATCH PLATE			2
5	83075	HINGE ASSY			2
4	83072	HINGE ASSY			2
3	83076	DOOR ASSY. SMALL			1
2	83073	DOOR ASSY. LARGE			1
1	83001	MAIN CASTING			1

BRITISH ACOUSTIC FILMS LTD

SOUNDHEAD

MODEL 378

GENERAL ASSY.

SCALE: FULL SIZE | USED ON | TOLERANCES UNLESS STATED: DEC. ½ MIN | DRN. BY | DATE 26-11-48 | CHKD BY | APPD BY | FINISH: SEE SCHEDULE | MATERIAL

PART Nº 378000

MODIFICATIONS

NOTE ADDED 26 11 48 SD

ITEM 15 WAS CHANGED TO PART Nº 83006 3 12 48 SD

SCANNING UNIT CHANGED TO 84 AS 378.000/1 ON SERIALISM 1 12 48 SD

NOTE ADDED 7 12 48 SD

PLATES ADDED 13 12 48 JP

ARMATURE PT Nº 483.000 AS 483.000/1 10 12 48 SD

EQUIPMENT RECESS NOTE UNDER HOOD 23 12 48 DP

NOTE ADDED 13 2 49 JPH

MODEL 378 SOUNDHEAD

Drawing No. 378000

Details	Part No.
Main Casting	83001
Door Assembly, Large	83073
Door Assembly, Small	83074
Hinge Assembly	83072
Hinge Assembly	83075
Catch Plate	83077
Scanning Unit Assembly	378001
Mounting Cushions	83023
Mounting Screws	83022
Sprocket Shaft Assembly	83003
Hold Back Sprocket	83006
Key Washer	83007
End Screw	83097
Main Drive Gear	83027
Chain Sprocket	83035
Key Washer Large	83032
Lay Shaft Assembly	83012
Jockey Roller Assembly	378024
Oil Pipe Assembly	378040
Oiler - Rotherham Type AL.I.	
Oil Collector Assembly	83054
3/4" Smth.Bore Con. Bush (Hex) Diecasting	CBM 3/4"
Nameplate	378044
Door Stay	381009
Shoulder Screw	83080
Distance Piece	69244
Cable Clip Nickel Pl. Ross Courtney RC.725	CRA 725
Terminal Block Assembly	51004
Designation Plate	60008
Designation Plate	83048
Screened terminal Block	83041
4 BA RD. HD. SCR x 1/4" Lg. Chr.Pl. M.S.	SCR 3/2045
4 BA RD. HD. SCR x 5/8" Lg. Chr.Pl. M.S.	SCR 3/2087
2 BA CSK.HD. SCR x 3/8" Lg. Chr.Pl. M.S.	SCR 3/58
4 BA RND HD. SCR x 5/8" Lg. Chr.Pl. M.S.	SCR 3/2087
2 BA CH. HD. SCR x 3/4" Lg. Chr.Pl. M.S.	SCR 3/1093
2 BA HEX HD. SCR x 1/2" Lg. Chr.Pl. M.S.	SCR 3/1072
4 BA CH. HD. SCR x 3/8" Lg. Chr.Pl. M.S.	SCR 3/59
4 BA CH. HD. SCR x 1/2" Lg. Chr.Pl. M.S.	SCR 3/1073
2 BA CH. HD. SCR x 5/8" Lg. Chr.Pl. M.S.	SCR 3/1086
7/16" B.S.F. PLAIN WASHER Chr.Pl. M.S.	WAS 3/426
7/16" B.S.F. Hex. Nut Chr.Pl. M.S.	NUT 3/145
Pk. Drive Scr. 00 x 1/4" Lg. Type U Chr.Pl. M.S.	S3/990001
Leather Washer	83052
Oiler Mounting	83053
Keeper	83050

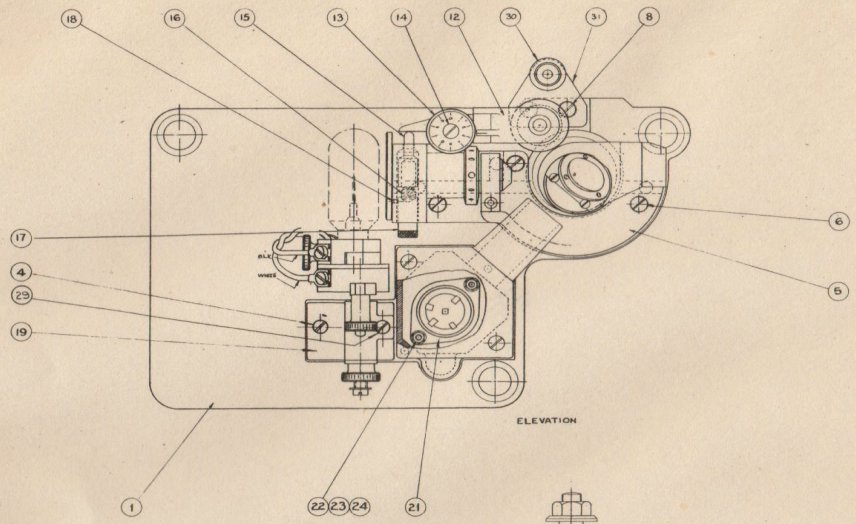

ELEVATION

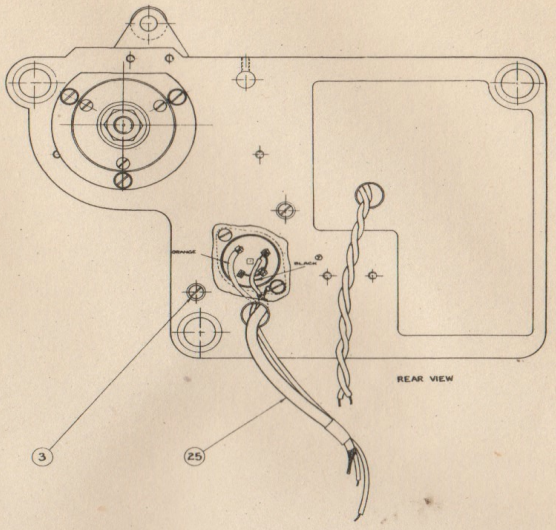

REAR VIEW

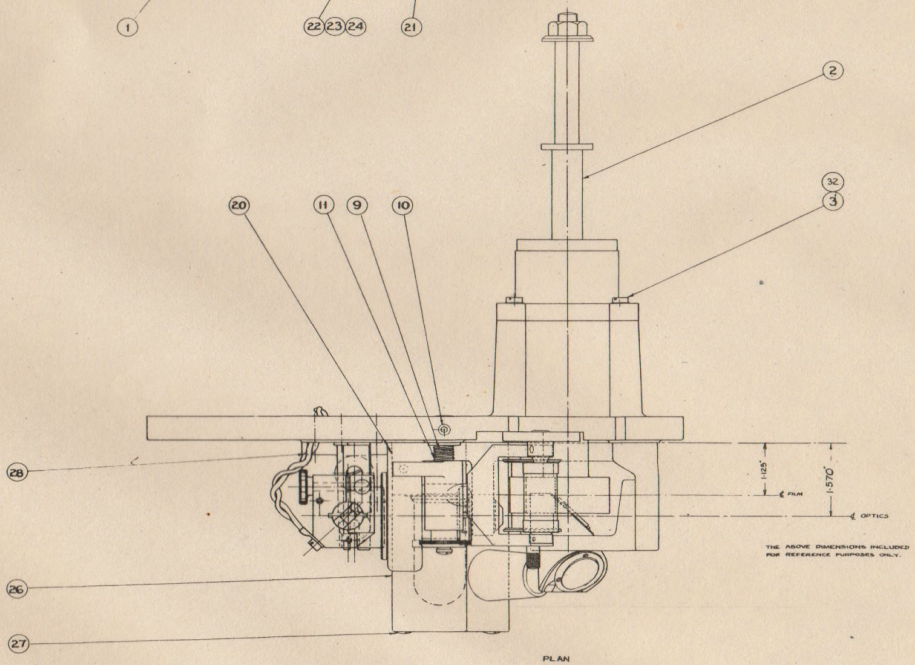

THE ABOVE DIMENSIONS INCLUDED FOR REFERENCE PURPOSES ONLY.

PLAN

ITEM	PART No.	DESCRIPTION	FINISH	MATERIAL	No. OFF
40					
39					
38					
37					
34					
35					
34					
33					
32		2 B.A. SHAKE WASHER	D.N.P.	STEEL	2
31	83,170	PLATE			1
30	83,175	GUIDE ROLLER & SPINDLE ASSY.			1
29		2BA CH.HD.SCR. x 1½ LG	CH.PL.	M.S.	1
28	83,190	EXCITER LAMP CABLE FORM			1
27	378,008	PHOTO CELL COVER FIXING SCREWS			2
26	378,007	PHOTO CELL COVER			1
25	83,189	CELL CABLE FORM			1
24	NUT B/S	4 B.A. STD. HEX. NUT	D.N.P.	M.S.	2
23	WAS 506	4 B.A. SHAKE WASHER		STEEL	2
22	SCR 9/1036	4 B.A. x ¾ LONG CH.HD SCREW	D.N.P.	M.S.	2
21	Wh. SP-4E	4 PIN VALVE HOLDER TYPE SM E			1
20	378,043	PHOTO CELL HOLDER ASSY			1
19	378,045	EXCITER LAMP HOLDER ASSY			1
18	GRU 8/401	4 B.A. x ⅜ LONG GRUB SCREW	BLUED	STEEL	1
17	378,039	SPRING PLUG			1
16	83,566	PLUNGER SPRING			1
15	378,037	PLUNGER			1
14	83,166	LOCKING SCREW			1
13	83,165	ADJUSTING KNOB			1
12	378,036	LAYON ROLLER ASSY			1
11	83,164	SPRING			1
10	GRU 8/402	2 B.A. x ⅜ SOCKET HD GRUB SCREW	BLUED	STEEL	1
9	83,163	PIVOT SPINDLE			1
8	SCR 3/1056	2 B.A. x ⅜ LONG CH.HD. SCREW	CH.PL.	M.S.	2
7	83,848	GUIDE ROLLER ASSY			1
6	SCR 3/1056	2 B.A. x ¼ LONG CH.HD SCREW	CH.PL.	M.S.	3
5	378,050	TAYLOR HOBSON OPTICAL UNIT			1
4		2 B.A. x ⅜ LONG CH. HD. SCREW	CH. PL.	M.S.	1
3	SCR 9/1033	2 B.A. x ⅝ LONG CH.HD SCREW	D.N.P.	M.S.	5
2	83.156	FLYWHEEL SHAFT & HOUSING ASSY			1
1	378,068	SCANG UNIT C5T6 & BOWEL ASSY			1

BRITISH ACOUSTIC FILMS LTD.

SCANNING UNIT ASSEMBLY

USED ON ASSY. No. 378,000

PART NUMBER 378,001

MATERIAL

DRG. No. 378 DATE 28-11-47

DRG. No. B.F.V. DATE

APPROVED AS SCHEDULE

DATE

SCALE ALL SIZES

V — MATERIAL RECEIVED INSPECT

W — GROUND OR TURN FINISHED ALL OVER

WW — CASE HARDEN, GRIND & LAPPED ALL OVER

REMARKS UNLESS OTHERWISE SPECIFIED ALL DIMENSIONS ARE IN INCHES. DECIMAL PLACES ± .005 ANGLES ± 1°

© COPYRIGHT

SCANNING UNIT ASSEMBLY

Drawing No. 378001

Details	Part No.
Scanning Unit Casting and Dowel Assembly	378068
Flywheel Shaft and Housing Assembly	83156
2 BA x 3/4" Lg. CH. HD. Screw DNP. M.S.	SCR 9/1093
2 BA x 5/8" Lg. CH. HD. Screw Ch.Pl. M.S.	
Taylor Hobson Optical Unit	378050
2 BA x 5/8" Lg. CH. HD. Screw Ch.Pl. M.S.	SCR 3/1086
2 BA x 3/8" Lg. CH. HD. Screw Ch.Pl. M.S.	SCR 3/1058
Pivot Spindle	83163
2 BA x 5/16" Skt.Hd. Grubscrew Blued Steel	GRU 8/64
Spring	83164
Layon Roller Assembly	378036
Adjusting Knob	83165
Locking Screw	83166
Plunger	378037
Plunger Spring	83566
Spring Plug	378039
4 BA x 1/8" Lg. Grubscrew Blued Steel	GRU 8/401
Exciter Lamp Holder Assembly	378045
Photo Cell Holder Assembly	378043
4 Pin Valveholder Type SP4E	VH SP4E
4 BA x 7/16" Lg. CH.HD.Scr. DNP M.S.	SCR 9/1066
4 BA Shakeproof Washer Steel	WAS 506
4 BA Std. Hex. Nut DNP M.S.	NUT 9/5
Cell Cable Form	83,189
Photo Cell Cover	378007
Photo Cell Cover Fixing Screws	378008
Exciter Lamp Cable Form	83190
2 BA CH.HD.SCR x 1½" Lg. CH.Pl. M.S.	
Guide Roller and Spindle Assembly	83975
Plate	83970
2 BA Shakeproof Washer DNP Steel	

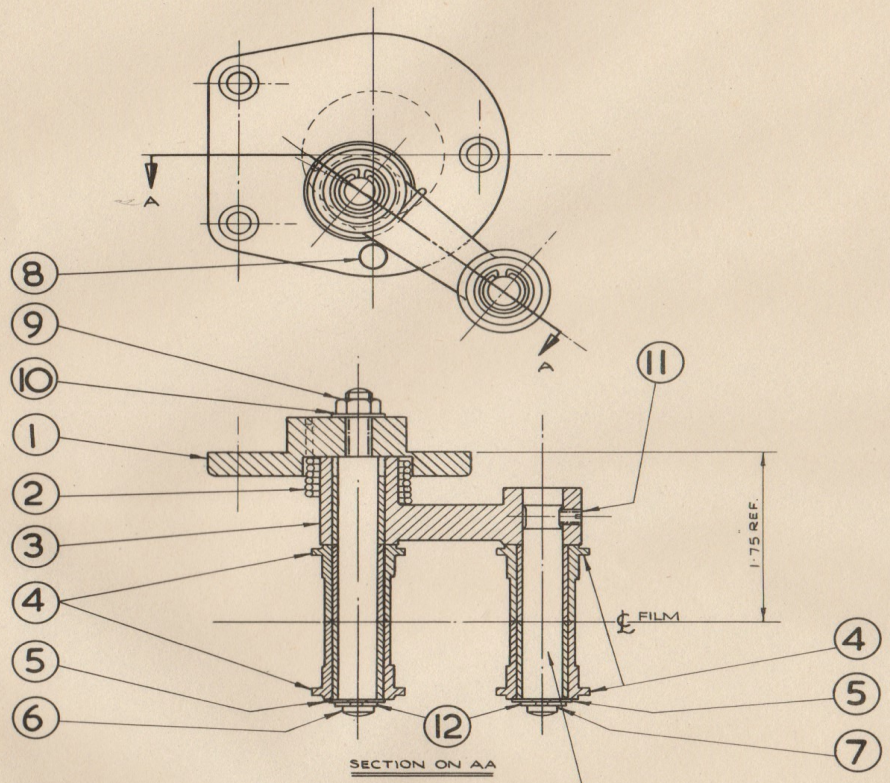

② GAP BETWEEN ROLLERS TO BE 0·005" (+ 0·003 / 0·000) ON THIS ROLLER ONLY.

ITEM	PART Nº	DESCRIPTION	FINISH	MATERIAL	Nº OFF.
20					
19					
18					
17					
16					
15					
14					
13					
12	83404	CIRCLIP			2
11	GRC8/62	2BA. SOCKET. HD SET SCR X 3/16 LG CUP END	BLUED	M.S.	1
10	WAS9/401	O.B.A. PLAIN WASHER	D.N.P	M.S.	1
9	NUT 9/1	O.B.A. HEX. NUT	D.N.P	M.S.	1
8	378031	STOP PIN			1
7	378030	SHAFT			1
6	378029	SHAFT			1
5	378067	1/4" WASHER			2
4	378028	ROLLER ASSEMBLY			4
3	378027	ARM ASSY.			1
③ 2	378072	SPRING			1
1	378025	MOUNTING			1

BRITISH ACOUSTIC FILMS LTD.

JOCKEY ROLLER ASSEMBLY FOR TYPE 378 SD. HD

PART Nº 378024

MODIFICATIONS

① ITEM 2 WAS PT. Nº 378.026 16·6·48 DD.

② NOTE ADDED 17.8.48 DD.

③ ITEM 2 WAS PT Nº 378070 15·2·49 A.F.W.

SCALE FULL SIZE

∇ = NORMAL MACHINED FINISH

∇∇ = GROUND OR FINE MACHINED FINISH

∇∇∇ = FINE GROUND FINISH WITHOUT WHEELMARKS

USED ON ASSY. Nº 378 000

TOLERANCES UNLESS STATED ON DECIMAL DIMS ± ON OTHER DIMS ±

DRN. BY | DATE

CKD BY | APPD BY.

MATERIAL AS SCHEDULE

FINISH NATURAL

JOCKEY ROLLER ASSEMBLY

Drawing No. 378024

Details	Part No.
Mounting	378025
Spring	378072
Arm Assembly	378027
Roller Assembly	378028
1/4" Washer	378067
Shaft	378029
Shaft	378030
Stop Pin	378031
O.B.A. Hex. Nut D.N.P. MS.	NUT 9/1
O.B.A. Plain Washer D.N.P. MS.	WAS 9/401
2 BA Socket HD.SET SCR. x 3/16" LG. CUP END BLUED M.S.	GRC 8/62
Circlip	83404

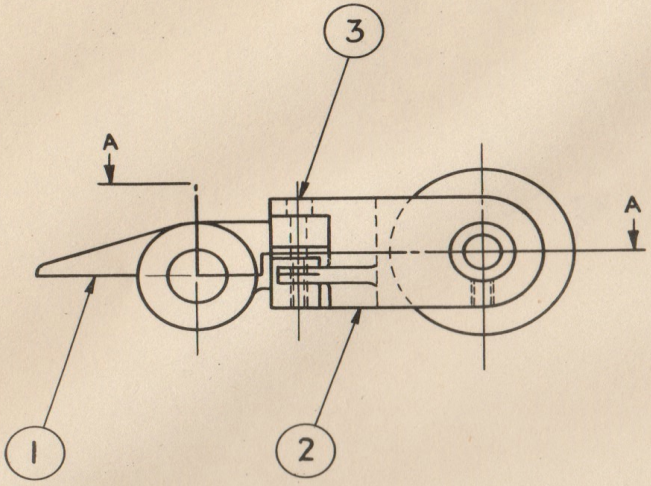

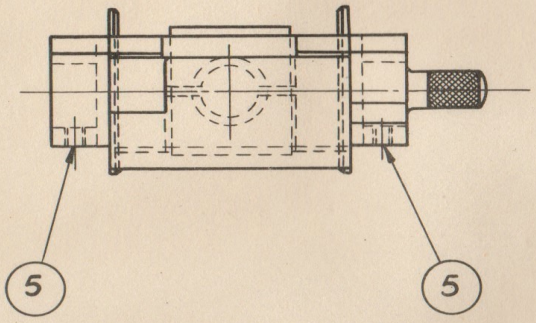

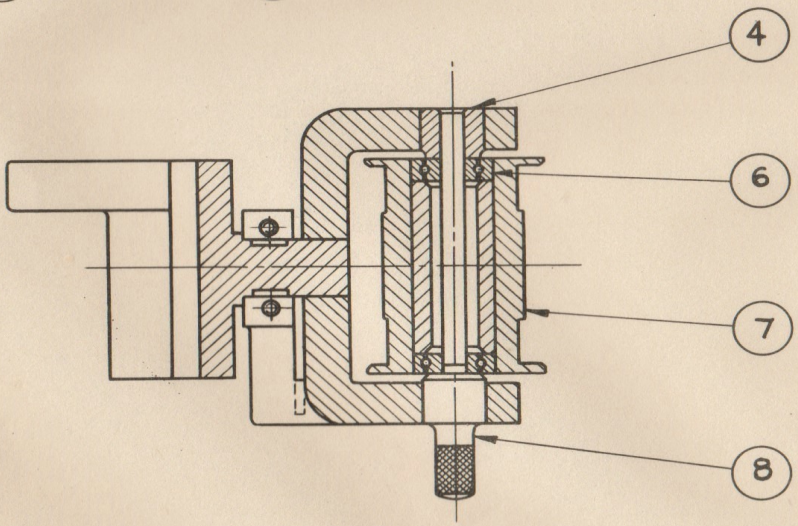

SECTION A-A

ITEM	PART No.	DESCRIPTION	FINISH	MATERIAL	No. OFF
10					
9					
8	83,524	SPINDLE			1
7	83,536	LAY ON ROLLER			1
6		BALL RACE		R&M LS 3/16" OR HOFFMAN TYPE 4666	2
5	GRU 8/2	6 B.A. x $\frac{3}{16}$" LG. SOCKET HD. GR. SCR	BLUED	STEEL	2
4	83,530	LOCATING COLLAR			1
3		6 B.A. x $\frac{5}{8}$" LG. S'K'T HD. CAP SCR.	BLUED	STEEL	2
2	83,521	LAY ON ROLLER ARM			1
1	378,010	BEARING ARM			1

BRITISH ACOUSTIC FILMS LTD.

LAY ON ROLLER ASSEMBLY

PART NUMBER 378036

MODIFICATIONS

SCALE FULL SIZE

$\overline{V}$ = NORMAL MACHINED FINISH

$\overline{VV}$ = GROUND OR FINE MACHINED FINISH

$\overline{VVV}$ = FINE GROUND FINISH WITHOUT WHEEL MARKS

USED ON ASSY. Nº 378,001

TOLERANCES. UNLESS STATED. ON DECIMAL DIMS. ± ON OTHER DIMS. ±

DRN. BY J.A.H. DATE 1.12.47

CKD. BY A.F.W. APPD. BY

MATERIAL AS SCHEDULE

FINISH NATURAL

LAY ON ROLLER ASSEMBLY

Drawing No. 378036

Details	Part No.
Bearing Arm	378010
Layon On Roller Arm	83521
6 BA x 5/8" LG. S'K'T. HD. CAP SCR. BLUED STEEL	
Locating Collar	83530
6 BA x 3/16" LG. SOCKET HD. GR.SCR. BLUED STEEL	GRU 8/2
Ball Race. R.&.M. LS.3/16" or Hoffman type 4666	
Lay On Roller	83536
Spindle	83524

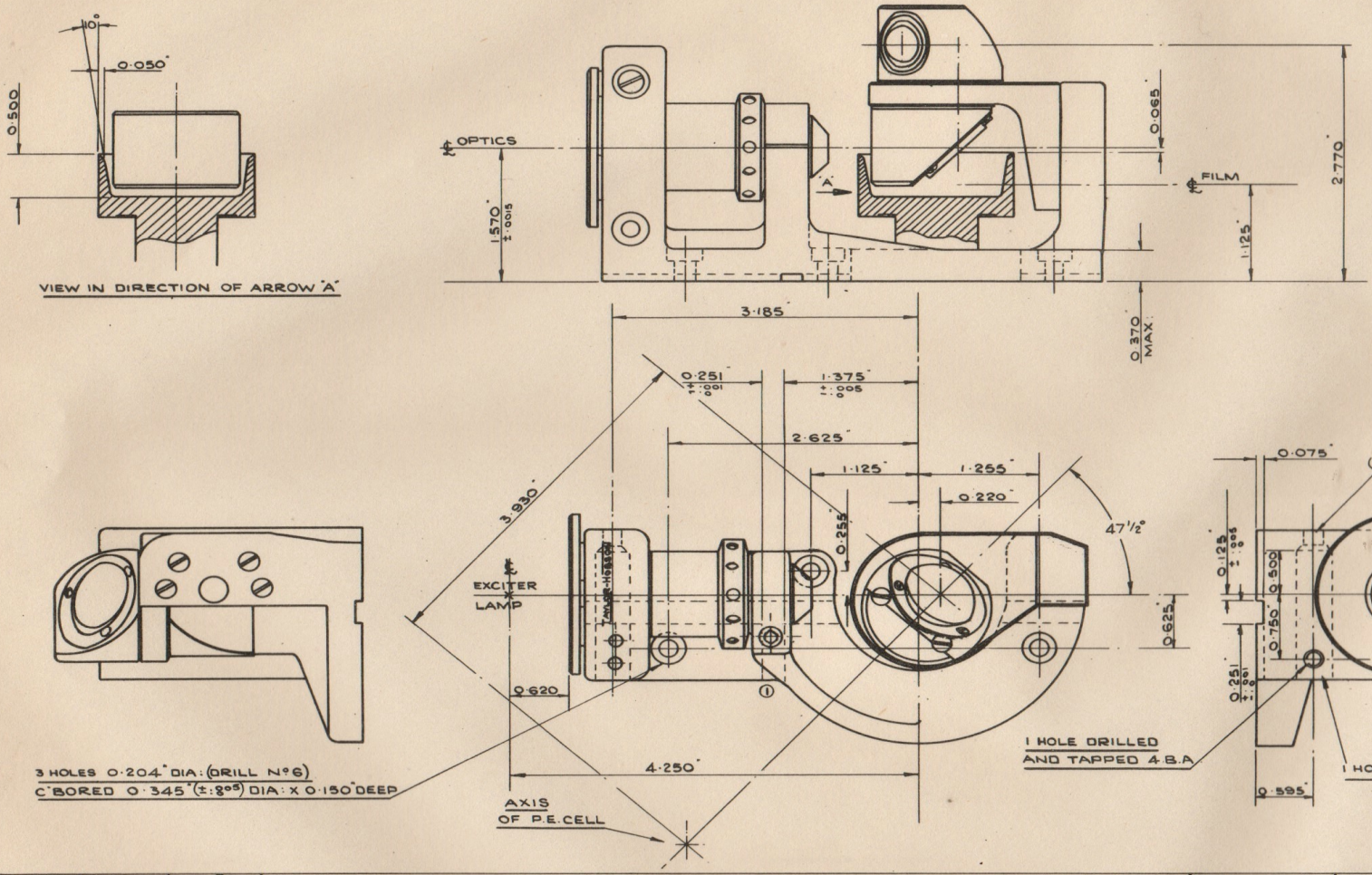

PROCESS.

MODIFICATIONS	
COPIED FROM TAYLOR HOBSON DWG: N°A 4703	
① VERTICAL KEY-WAY WAS SHOWN ABOVE ℄ 2·2·48 FAH.	
② FINISH WAS WHITE ENAMEL LENSES BLOOMED 5·3·48. FAH.	

SCALE FULL SIZE	
▽ NORMAL MACHINE FINISH	
▽▽ GROUND OR FINE MACHINED FINISH	
▽▽▽ FINE GROUND FINISH WITHOUT WHEELMARKS	
USED ON ASSY N° 378·001	
TOLERANCES, UNLESS STATED ON DECIMAL DIM: ± ·005 ON OTHER DIM: ±	
DRN BY. F.A.H. DATE. 2·12·47	
CKD BY A.F.W. APPD BY.	
MATERIAL PURCHASED COMPLETE	
② FINISH WHITE ENAMEL & CHROMIUM	

BRITISH ACOUSTIC FILMS LTD

TAYLOR HOBSON OPTICAL UNIT

PART N° 378050.

G.K.20 PRE-AMPLIFIER TYPE 563

With G.K.20 equipment shipped so far the pre-amplifier has been of type 384.

Shortly the 384 will be superseded by a new pre-amplifier, type 563. The new type will be housed in a case identical with that used for the older pattern, and the two amplifier chassis, part number 384004 for the old, and part number 563001 for the new, will be of the same physical dimensions and interchangeable with one another.

Experience of a large number of G.K.20 installations showed a tendency in some cases for trouble to be experienced due to external disturbances, making and breaking of electrical contacts, etc., being picked up by the amplifier channel and appearing at the speakers as switch clicks.

Although the majority of installations were immune from the trouble, investigation showed that G.K.20 amplifier equipment was not equal to G.K.21 amplifier equipment in immunity from pick up trouble. Tests showed that powerful external electrical disturbances which did not affect a G.K.21 amplifier chain could inject a signal into the early stages of the G.K.20 chain, so in the revised pre-amplifier, type 563, the first two stages have been redesigned.

In the older amplifier, the first two stages of amplification were carried out by the two halves of a double triode. In the new amplifier the place of the double triode is taken by a single pentode, 6J7, 6J7GT, or EF37. (Note that the large physical size of the 6J7G makes this tube unsuitable, as it interferes with hinging the chassis forward out of the case). The revision of the input stage results in the G.K.20 channel having the same ability to reject outside interference as has the G.K.21 channel.

The new pre-amplifier has slightly less sensitivity on the film input than its predecessor, the difference is approximately 3 db. If necessary this can be regained easily by a slight increase in cell potential. All inputs, film disc and microphone, are taken to the grid of the pentode, but the disc and microphone inputs are attenuated 6 db so that approximately the same setting of the volume control will be employed irrespective of what is connected to the input terminals.

The FILM, DISC, MICROPHONE switch is arranged so that whichever of the three inputs is selected, the other two are grounded. With the switch on FILM, no signal from the pick-up will be received at the grid even though the non-synchronous attachment be running, with a needle in the groove of the record.

With the switch in the FILM position the amplifier's response compensates for the loss at high frequencies due to the self capacity of the cell cables. With the switch in either of the other positions this compensation is cut out.

There has been no alteration of any moment in the last two stages of the amplifier. The revisions affect only the input end of the amplifier, the rest can be accepted for practical purposes as identical with the older equipment.

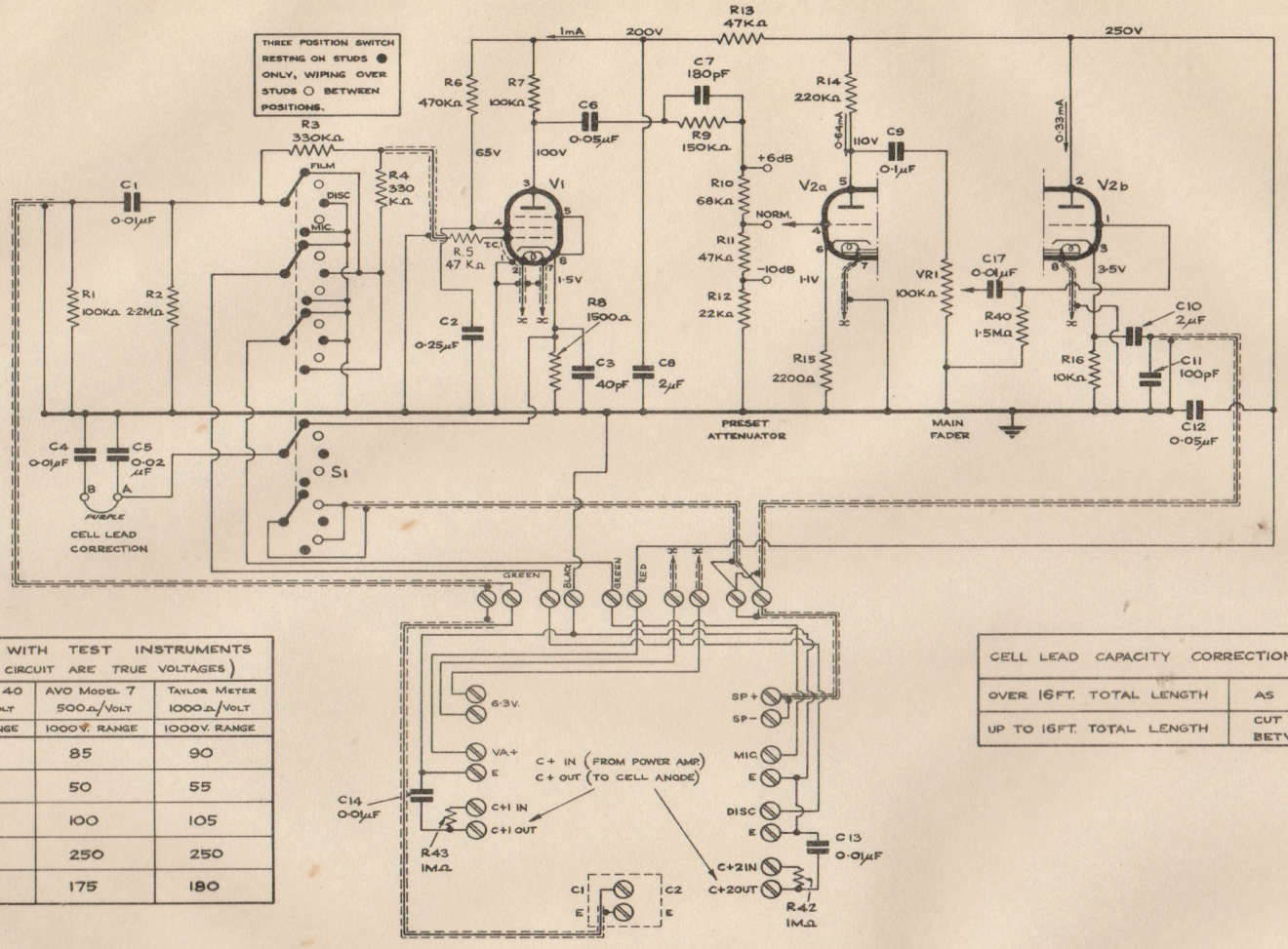

VOLTAGES MEASURED WITH TEST INSTRUMENTS (FIGURES STATED ON CIRCUIT ARE TRUE VOLTAGES)				
		AVO MODEL 40 166Ω/VOLT	AVO MODEL 7 500Ω/VOLT	TAYLOR METER 1000Ω/VOLT
		1200V. RANGE	1000V. RANGE	1000V. RANGE
V1	Va.	70	85	90
V1	Vg2.	40	50	55
V2a	Va.	80	100	105
V2b	Va.	250	250	250
JUNCTION R6 & R7		160	175	180

CELL LEAD CAPACITY CORRECTION (C4 AND C5)	
OVER 16FT. TOTAL LENGTH	AS CONNECTED
UP TO 16FT. TOTAL LENGTH	CUT PURPLE LINK BETWEEN A & B.

MODIFICATIONS

VALVE BASE (UNDERSIDE VIEW)

PART No.	DETAIL
	R1 100KΩ ±10% ERIE *100
	R2 2·2MΩ ±20% " #8
	R3 330KΩ ±5% " "
	R4 330KΩ ±5% " "
	R5 47KΩ ±20% " #9
	R6 470KΩ ±10% " #8
	R7 100KΩ ±10% " #100
	R8 1500Ω ±5% " #8
	R9 150KΩ ±5% " "
	R10 68KΩ ±5% " "
	R11 47KΩ ±5% " "
	R12 22KΩ ±5% " "
	R13 47KΩ ±5% " "
	R14 220KΩ ±20% " "
	R15 2200Ω ±10% " "
	R16 10KΩ ±10% " "
	R42 1MΩ ±20% " "
	R43 1MΩ ±20% " "
	VR1 100KΩ Fader (220-39)
384057	R40 1·5MΩ ±20% ERIE #8
	C17 0·01μF ±10% T.C.C. M3N
	C1 0·01μF ±1% M3N
	C2 0·25μF ±20% CP415
	C3 40pF ±20% CC40Y
	C4 0·01μF ±1% M3N
	C5 0·02μF ±20% CP346
	C6 0·05μF ±20% CP375
	C7 180pF ±5% SMMN
	C8 2μF ±1% 82.1M
	C9 0·1μF ±20% CP466
	C10 2μF ±25% Dubilier 412
	C11 100pF ±20% SMMN
	C12 0·05μF ±20% CP375
	C13 0·01μF ±1% M3N
	C14 0·01μF ±1% M3N
	ALL CONDENSERS T.C.C. UNLESS STATED
384058	S1 F.D.M. SWITCH
	V1 EF37, 6J7GT/G/J7
	V2a, V2b ECC35, 6SL7GT.

BRITISH ACOUSTIC FILMS LTD		
SPECIFICATION No.		THEORETICAL CIRCUIT
USED ON	DATE	VOLTAGE AMP. MARK II (20W. EQUIPT.)
DRWN BY G.J. Hadden	4·5·49	
TRCD BY		ISSUE No. 1
CHKD BY	11-5-49	C-563000
APPD BY	11-5-49	

VOLTAGE AMPLIFIER MARK II

20w. Equipment

Drawing No. C-563,000

Details		Part No.
R1	100,000 Ohms plus/minus 10% Erie No.100	
R2.	2.2 Megohms plus/minus 20% " No.8.	
R3.	330,000 Ohms plus/minus 5% " "	
R4.	330,000 Ohms plus/minus 5% " "	
R5.	47,000 Ohms plus/minus 20% " No.9.	
R6.	470,000 Ohms plus/minus 10% " No.8.	
R7.	100,000 Ohms plus/minus 10% " No.100	
R8.	1,500 Ohms plus/minus 5% " No.8.	
R9.	150,000 Ohms plus/minus 5% " "	
R10.	68,000 Ohms plus/minus 5% " "	
R11.	47,000 Ohms plus/minus 5% " "	
R12.	22,000 Ohms plus/minus 5% " "	
R13.	47,000 Ohms plus/minus 5% " "	
R14.	220,000 Ohms plus/minus 20% " "	
R15.	2,200 Ohms plus/minus 10% " "	
R16.	10,000 Ohms plus/minus 10% " "	
R42.	1 Megohm plus/minus 20% " "	
R43.	1 Megohm plus/minus 20% " "	
VR1.	100,000 Ohms Fader (R.20-39)	
R40.	1.5 Megohm plus/minus 20% Erie No.8.	384,057
C17.	0.01 Micro Farad plus/minus 10% T.C.C. M3N.	
C1.	0.01 Micro Farad plus/minus 15% M3N	
C2.	0.25 Micro Farad plus/minus 20% CP47S	
C3.	40 Pica Farad plus/minus 20% CC40Y	
C4.	0.01 Micro Farad plus/minus 15% M3N	
C5.	0.02 Micro Farad plus/minus 20% CP34S	
C6.	0.05 Micro Farad plus/minus 20% CP37S	
C7.	180 Pica Farad plus/minus 5% SMWN	
C8.	2 Micro Farad plus/minus 15% 82 1M	
C9.	0.1 Micro Farad plus/minus 20% CP46S	
C10.	2 Micro Farad plus/minus 25% DUBILIER 412	
C11.	100 Pica Farad plus/minus 20% SMWN	
C12.	0.05 Micro Farad plus/minus 20% CP37S	
C13.	0.01 Micro Farad plus/minus 15% M3N	
C14.	0.01 Micro Farad plus/minus 15% M3N	
	ALL CONDENSERS T.C.C. UNLESS STATED.	
S1.	F.D.M. Switch	384,058
V1	EF37, 6J7GT, 6J7	
V2a, V2b	ECC35, 6SL7GT.	

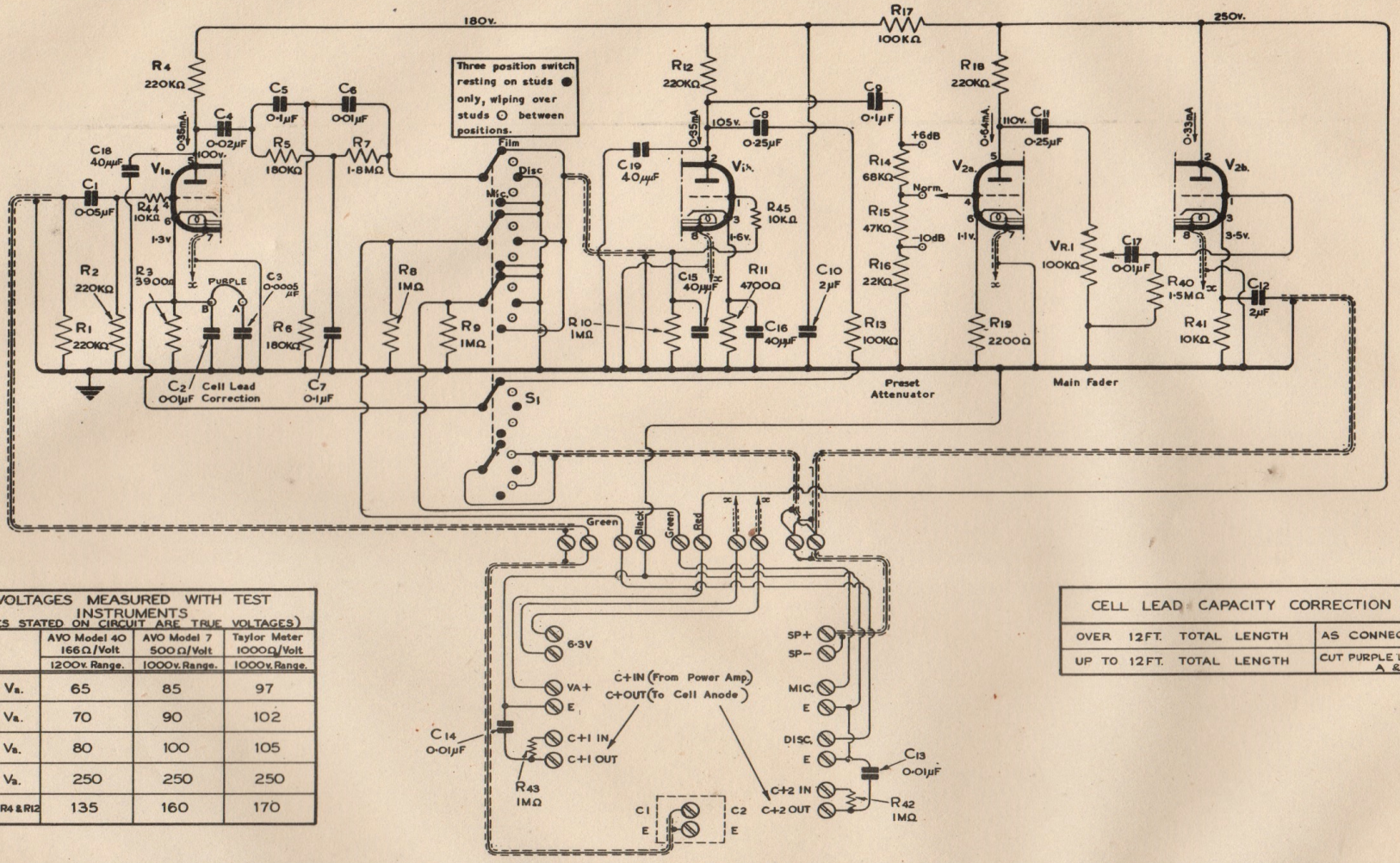

VOLTAGES MEASURED WITH TEST INSTRUMENTS
(FIGURES STATED ON CIRCUIT ARE TRUE VOLTAGES)

	AVO Model 40 166Ω/Volt 1200v. Range.	AVO Model 7 500Ω/Volt 1000v. Range.	Taylor Meter 1000Ω/Volt 1000v. Range.
V1a. Va.	65	85	97
V1b. Va.	70	90	102
V2a. Va.	80	100	105
V2b. Va.	250	250	250
Junction R4 & R12	135	160	170

CELL LEAD CAPACITY CORRECTION (C2 AND C3)

OVER 12FT. TOTAL LENGTH	AS CONNECTED
UP TO 12FT. TOTAL LENGTH	CUT PURPLE LINK BETWEEN A & B

MODIFICATIONS

1	CONNECTIONS, OF OTHER END OF SCREENED LEAD FROM SP+ SP− REVERSED. 22·3·48
2	PART NOS. ADDED 13·4·48 LM.
3	CELL LEAD CORRECTION WAS FOR 1GFT. 14:V:48
4	C.18 & C.19 added R.44 & 45 added Note re C.11 lead correction revsd Main leads screwed 21:V:48

PART No.	DETAIL			
REY.8224	R1	220KΩ ±5% Erie No8	C1	0·05μF ±20% CP36S
REY.8224	R2	220KΩ ±5% " "	C2	0·01μF ±15% M3N
REY.8392	R3	3900Ω ±5% " "	C3	0·0005μF ±15% M3N
REW.8224	R4	220KΩ ±20% " "	C4	0·02μF ±20% CP34S
REX.8184	R5	180KΩ ±10% " "	C5	0·1μF ±20% CP37N
REX.8184	R6	180KΩ ±10% " "	C6	0·01μF ±25% CP32N
REX.8185	R7	1·8MΩ ±10% " "	C7	0·1μF ±20% CP37N
REW.8105	R8	1MΩ ±20% " "	C8	0·25μF ±20% CP47S
REW.8105	R9	1MΩ ±20% " "	C9	0·1 μF ±20% CP46S
REW.8105	R10	1MΩ ±20% " "	C10	2μF ±15% 821M
REX.8472	R11	4700Ω ±10% " "	C11	0·25μF ±20% CP47S
REW.8224	R12	220KΩ ±20% " "	C12	2μF ±25% Dubilier412
REY.8104	R13	100KΩ ±5% " "	C13	0·01μF ±15% M3N
REX.8104	R14	68KΩ ±5% " "	C14	0·01μF ±15% M3N
REY.8683	R15	47KΩ ±5% " "	C15	40μμF ±20% CC40Y
REY.8473	R16	22KΩ ±5% " "	C16	40μμF ±20% CC40Y
REY.8223	R17	100KΩ ±10% " "		All condensers T.C.C. unless otherwise stated
REX.8104	R18	220KΩ ±20% " "		
REW.8224	R19	2200Ω ±10% " "	S1	F.D.M. Switch
REX.8222	R41	10KΩ ±10% " "		
REX.8103	R42	1MΩ ±20% " "	V1a, V1b	ECC 35,
REW.8105	R43	1MΩ ±20% " "	V2a, V2b	ECC 35, 6SL7GT.
REW.8105	R44	10KΩ ±20% Erie No8		
384057	R45	10KΩ ±20% " "		
	R39	100KΩ Fader (220Ω)		
	R40	1·5MΩ ±20% Erie No8		
	C17	0·01μF ±10% M3N		

384088	
VECC 35	
VECC 35 V6SL7GT	
R44 10KΩ ±20% ERIE No8	
R45 10KΩ ±20% " "	
C18 40μμF ±20% CC40Y	
C19 40μμF ±20% " "	

BRITISH ACOUSTIC FILMS LTD.

SPECIFICATION No. 384000	THEORETICAL CIRCUIT VOLTAGE AMPLIFIER (20W EQUIPT.)
USED ON	DATE
DRAWN BY	3·3·48
TRACED BY	
APPVD. BY	10.3.48.
CHKD. BY	9·3·48
ISSUE No. 3	
C-384000	

VOLTAGE AMPLIFIER

20w. EQUIPMENT

Drawing No. C.384.000

Details		Part No.
R1.	220,000 Ohms plus/minus 5% ERIE No.8.	REY.8224
R2.	220,000 Ohms plus/minus 5% " "	REY.8224
R3.	3900 Ohms plus/minus 5% " "	REY.8392
R4.	220,000 Ohms plus/minus 20% " "	REW.8224
R5.	180,000 Ohms plus/minus 10% " "	REX.8184
R6.	180,000 Ohms plus/minus 10% " "	REX.8184
R7.	1.8 Megohm plus/minus 10% " "	REX.8185
R8.	1 Megohm plus/minus 20% " "	REW.8105
R9.	1 Megohm plus/minus 20% " "	REW.8105
R.10.	1 Megohm plus/minus 20% " "	REW.8105
R.11.	4700 Ohms plus/minus 10% " "	REX.8472
R.12.	220,000 Ohms plus/minus 20% " "	REW.8224
R.13.	100,000 Ohms plus/minus 5% " "	REY.8104
R.14.	68,000 Ohms plus/minus 5% " "	REY.8683
R.15.	47,000 Ohms plus/minus 5% " "	REY.8473
R.16.	22,000 Ohms plus/minus 5% " "	REY.8223
R.17.	100,000 Ohms plus/minus 10% " "	REX.8104
R.18.	220,000 Ohms plus/minus 20% " "	REW.8224
R.19.	2200 Ohms plus/minus 10% " "	REX.8222
R.41.	10,000 Ohms plus/minus 10% " "	REX.8103
R.42.	1 Megohm plus/minus 20% " "	REW.8105
R.43.	1 Megohm plus/minus 20% " "	REW.8105
VR.1.	100,000 Ohms Fader (R.20 to R.39)	)
R.40.	1.5 Megohm plus/minus 20% ERIE No.8.	384,057
C.17.	0.01 Micro Farad plus/minus 10% M3N	)

C1.	0.05 Micro Farad plus/minus 20%	CP36S	CX.3082
C2.	0.01 Micro Farad plus/minus 15%	M3N	CX.2517
C3.	0.005 " Farad plus/minus 15%	M3N	CX.2515
C4.	0.02 Micro Farad plus/minus 20%	CP34S	CX.3400
C5.	0.1 Micro Farad plus/minus 20%	CP37N	CX.3121
C6.	0.01 Micro Farad plus/minus 25%	CP32N	CX.3854
C7.	0.1 Micro Farad plus/minus 20%	CP37N	CX.3121
C8.	0.25 Micro Farad plus/minus 20%	CP47S	CX.1826
C9.	0.1 Micro Farad plus/minus 20%	CP46S	CX 1822
C10.	2 Micro Farad plus/minus 15%	82IM	CX1.1426
C11.	0.25 Micro Farad plus/minus 20%	CP47S	CX.1826
C12.	2 Micro Farad plus/minus 25%	(Dubilier 412	CX.412/2
C13.	0.01 Micro Farad plus/minus 15%	M3N	CX.2517
C14.	0.01 Micro Farad plus/minus 15%	M3N	CX.2517
C15.	40 Pica Farad plus/minus 20%	CC40Y	CX.9404
C16.	40 Pica Farad plus/minus 20%	CC40Y	CX.9404

ALL CONDENSERS T.C.C. UNLESS OTHERWISE STATED

S1.	F.D.M. Switch	384,058
V1a, V1b	ECC 35,	VECC.35
V2a, V2b	ECC 35, 6SL7GT	VECC 35 V65L7GT

R44.	10,000 Ohms plus/minus 20%	ERIE No.8
R45.	10,000 Ohms plus/minus 20%	" "
C18.	40 Pica Farad plus/minus 20%	CC40Y
C19.	40 Pica Farad plus/minus 20%	CC40Y

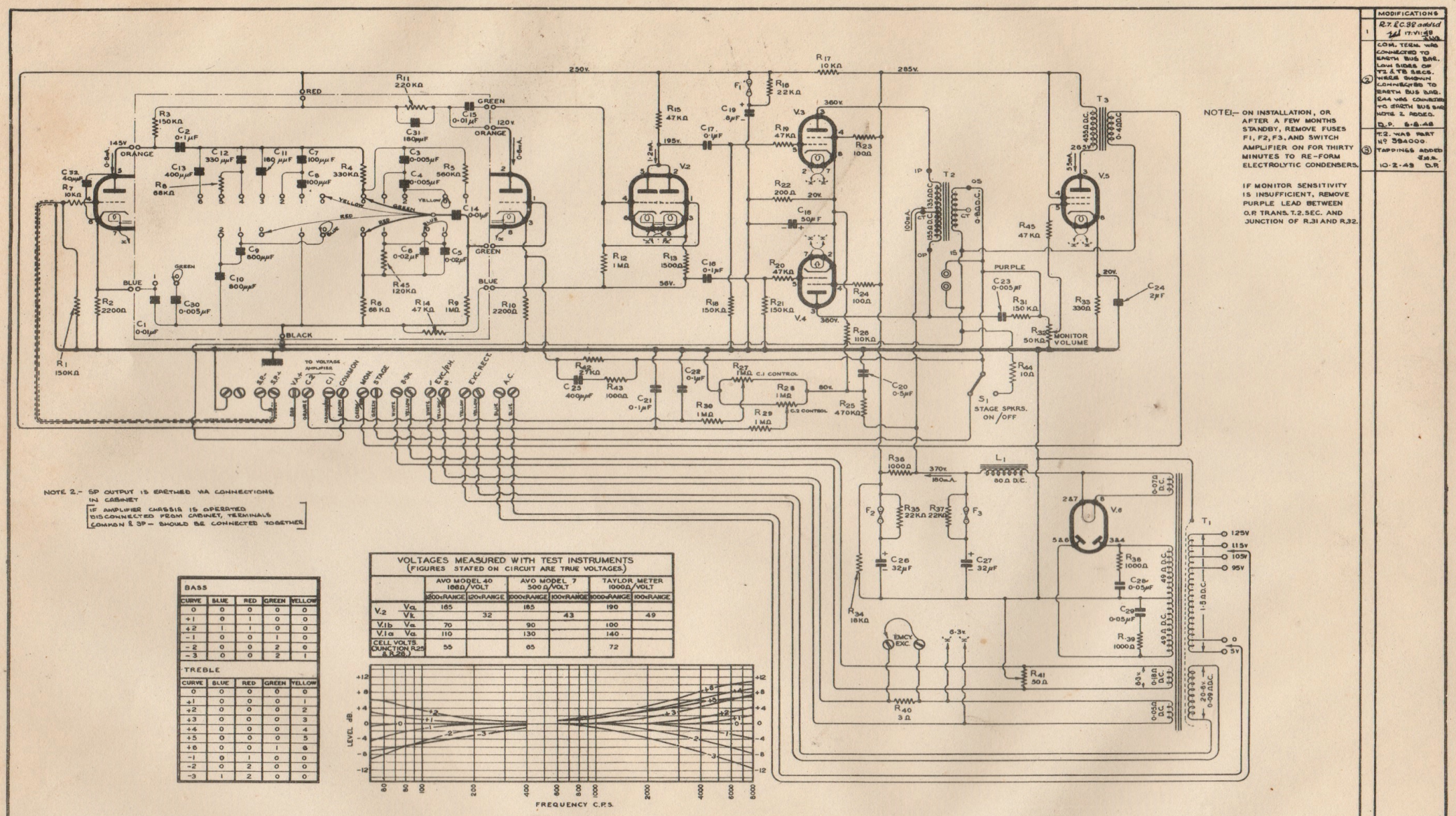

NOTE 2.- SP OUTPUT IS EARTHED VIA CONNECTIONS IN CABINET

IF AMPLIFIER CHASSIS IS OPERATED DISCONNECTED FROM CABINET, TERMINALS COMMON & SP- SHOULD BE CONNECTED TOGETHER

NOTE:- ON INSTALLATION, OR AFTER A FEW MONTHS STANDBY, REMOVE FUSES F1, F2, F3, AND SWITCH AMPLIFIER ON FOR THIRTY MINUTES TO RE-FORM ELECTROLYTIC CONDENSERS.

IF MONITOR SENSITIVITY IS INSUFFICIENT, REMOVE PURPLE LEAD BETWEEN O.P. TRANS. T.2. SEC. AND JUNCTION OF R.31 AND R.32.

MODIFICATIONS	
1	R.7. EC.38 added 17-VI-48
2	COM. TERM. WAS CONNECTED TO EARTH BUS BAR. LOW SIDES OF T2 & T3 SECS. WERE SHOWN CONNECTED TO EARTH BUS BAR. R44 WAS CONNECTED TO EARTH BUS BAR NOTE 2. ADDED. D.P. 6-8-48
3	T.2. WAS PART Nº 384000 TAPPINGS ADDED 10-2-49 D.P.

BASS

CURVE	BLUE	RED	GREEN	YELLOW
0	0	0	0	0
+1	0	1	0	0
+2	1	1	0	0
-1	0	0	1	0
-2	0	0	2	0
-3	0	0	2	1

TREBLE

CURVE	BLUE	RED	GREEN	YELLOW
0	0	0	0	1
+1	0	0	0	2
+2	0	0	0	3
+3	0	0	0	4
+4	0	0	0	5
+5	0	0	0	6
+6	0	0	1	6
-1	0	1	0	0
-2	0	2	0	0
-3	1	2	0	0

VOLTAGES MEASURED WITH TEST INSTRUMENTS
(FIGURES STATED ON CIRCUIT ARE TRUE VOLTAGES.)

		AVO MODEL 40 100Ω/VOLT		AVO MODEL 7 500Ω/VOLT		TAYLOR METER 1000Ω/VOLT	
		1200v RANGE	120v RANGE	1000v RANGE	100v RANGE	3000v RANGE	100v RANGE
V.2	Va.	165		165		190	
	Vk.		32		43		49
V.1b	Va.	70		90		100	
V.1a	Va.	110		130		140	
CELL VOLTS (JUNCTION R.25 & R.26)		55		65		72	

PART No.	DETAIL	
	R1	150KΩ ±2% ½Watt
	R2	2200Ω ±5% "
	R3	150KΩ ±2% "
	R4	330KΩ ±2% "
	R5	560KΩ ±5% "
	R6	68KΩ ±5% "
	R7	10KΩ ±20% "
	R8	68KΩ ±5% "
	R9	1MΩ ±20% "
	R10	2200Ω ±5% "
	R11	220KΩ ±20% "
	R12	1MΩ ±20% "
	R13	1500Ω ±10% "
	R14	47KΩ ±5% "
	R15	47KΩ ±5% "
	R16	22KΩ ±20% "
	R17	10KΩ ±10% "
	R18	150KΩ ±20% "
	R19	47KΩ ±10% "
	R20	47KΩ ±10% "
	R21	150KΩ ±20% 1w WW
	R22	200Ω ±5% 3W WW
	R23	100Ω ±10% 1w WW
	R24	100Ω ±10% "
	R25	470KΩ ±5% "
	R26	110KΩ ±5% ½w CRYSTALLER CP1A
	R27	1MΩ POT. "
	R28	1MΩ "
	R29	1MΩ ±20% ½w ERIE No.8
	R30	1MΩ ±20% "
	R31	150KΩ ±20% "
	R32	50KΩ POT. CRYSTALLER CPB.
	R33	330Ω ±10% 1w ERIE No.1 WELWYN
	R34	18KΩ ±5% 1w AP41
	R35	22KΩ ±20% ½w ERIE No.8
	R36	1000Ω ±5% 3W WW12
	R37	22KΩ ±20% ½w ERIE No.8
	R38	1000Ω ±20% " "
	R39	1000Ω ±20% " "
	R40	3Ω ±5% 1W WW40
	R41	50Ω POT. BERCO P.42
	R42	27KΩ ±5% ½w ERIE No.8
	R43	1000Ω ±20% " "
	R44	10Ω ±10% 3W WELWYN W.22
	R45	47KΩ ±20% ½w ERIE No.8
	C1	0·01μF 350v TCC MIDGET M3N
	C2	0·1μF 350v TCC MIDGET M3N
	C3	0·005μF ±10% " "
	C4	0·005μF ±10% " "
	C5	0·02μF ±20% 350v TCC PAPER CP25N
	C6	0·02μF ±20% " "
	C7	100μμF ±10% 3kV CERAMITE N750
	C8	100μμF ±10% " "
	C9	600μμF ±10% " "
	C10	800μμF ±10% " "
	C11	180μμF ±10% 3kV CERAMITE N750
	C12	330μμF ±2% 3kV " "
	C13	400μμF ±20% 3kV CERAMITE N750
	C14	0·01μF ±20% 1kV WELWYN W.21
	C15	0·01μF ±20% 1kV WELWYN W.21
	C16	0·1μF ±20% 350v TCC PAPER CP48S
	C17	0·1μF ±20% " "
	C18	50μF 25v CERAMIC CE81D
	C19	8μF 500v ±20% CERAMIC CE81P
	C20	0·5μF ±20% 350v TCC PAPER CP47N
	C21	0·1μF ±20% " " CP25N
	C22	0·1μF ±20% " " "
	C23	0·005μF ±20% 1kV WELWYN W.21
	C24	2μF ±20% 350v TCC PAPER CP48S
	C25	400μμF ±10% 7·5kV CERAMITE 512
	C26	32μF 500v
	C27	32μF 500v
	C28	0·05μF ±20% 1kV WELWYN W.21
	C29	0·05μF ±20% " "
	C30	0·005μF ±10% 1kV WELWYN W.21
	C31	180μμF ±10% 3kV CERAMITE N750
	C32	40μF ±20% 450v CCAST
	T1	MAINS TRANS.
	T2	O.P. TRANS.
	T3	MON. O.P. TRANS.
	L1	CHOKE 7H at 250mA
	F2	CARTRIDGE FUSE 250mA BELLING-LEE L1055/250mA
	F3	" " 100mA " " L1055/100mA
	S1	SPEAKER SWITCH
	V1a	ECC35, 6SL7GT
	V1b	" "
	V2	ECC35, 6SL7GT
	V3	" "
	V4	KT88, 6LG, EL37
	V5	" "
	V6	U52, 5U4G, 5Y4G,
	F1	CARTRIDGE FUSE 100mA BELLING-LEE L1055/100mA

389,002	
488,000	
389,003	
88,000	
389,004	

BRITISH ACOUSTIC FILMS LTD.

SPECIFICATION No. 415 000		THEORETICAL CIRCUIT 20w. POWER AMPLIFIER (95v. - 130v.) 40 - 100 c/s
USED ON	DATE	
DRAWN BY [illegible]	27-v-48	ISSUE No. 1234
TRACED BY [illegible]		
CHECKED BY [illegible]		C-415,000
APPROVED BY [illegible]		

20w. POWER AMPLIFIER

Drawing No. C.415000

Details		Part No.
R1.	150,000 Ohms plus/minus 20%	Erie No.8.
R2.	2200 Ohms plus/minus 5%	" "
R3.	150,000 Ohms plus/minus 20%	" "
R4.	330,000 Ohms plus/minus 5%	" "
R5.	560,000 Ohms plus/minus 5%	" "
R6.	68,000 Ohms plus/minus 5%	" "
R7.	10,000 Ohms plus/minus 20%	" "
R8.	68,000 Ohms plus/minus 5%	" "
R9.	1 Megohm plus/minus 20%	" "
R10.	2200 Ohms plus/minus 5%	" "
R11.	220,000 Ohms plus/minus 20%	" "
R12.	1 Megohm plus/minus 20%	" "
R13.	1500 Ohms plus/minus 10%	" "
R14.	47,000 Ohms plus/minus 5%	" "
R15.	47,000 Ohms plus/minus 5%	" "
R16.	22,000 Ohms plus/minus 20%	" "
R17.	10,000 Ohms plus/minus 10%	" "
R18.	150,000 Ohms plus/minus 20%	" "
R19.	47,000 Ohms plus/minus 10%	" "
R20.	47,000 Ohms plus/minus 10%	" "
R21.	150,000 Ohms plus/minus 20%	" "
R22.	200 Ohms plus/minus 5%	AW3115 WELWYN
R23.	100 Ohms plus/minus 10%	Erie No.8.
R.24.	100 Ohms plus/minus 10%	" "
R25.	470,000 Ohms plus/minus 5%	" "
R26.	110,000 Ohms plus/minus 5%	" "
R27.	1 Megohm Potentiometer	CPA. Dubilier
R.28.	1 Megohm Potentiometer	" "
R29.	1 Megohm plus/minus 20%	Erie No.8.
R30.	1 Megohm plus/minus 20%	" "
R31.	150,000 Ohms plus/minus 20%	" "
R32.	50,000 Ohms Potentiometer	CPB.Dubilier
R33.	330 Ohms plus/minus 10%	Erie No.1.
R34.	18,000 Ohms plus/minus 5%	AP41 Welwyn
R35.	22,000 Ohms plus/minus 20%	Erie No.8.
R36.	1000 Ohms plus/minus 5%	AW3112
R37.	22,000 Ohms plus/minus 20%	Erie No.8.
R38.	1000 Ohms plus/minus 20%	" "
R39.	1000 Ohms plus/minus 20%	" "
R40.	3 Ohms plus/minus 5%	VR/KO BERCO
R41.	50 Ohms Potentiometer	BERCO F.4.
R42.	27,000 Ohms plus/minus 5%	Erie No.8.
R43.	1000 Ohms plus/minus 20%	" "
R44.	10 Ohms plus/minus 10%	AW3112 WELWYN
R45.	47,000 Ohms plus/minus 20%	Erie No.8.
C.1.	0.01 Micro Farad plus/minus%	T.C.C. M3N
C.2.	0.1 Micro Farad plus/minus 20%	T.C.C. CP46S
C.3.	0.005 " " plus/minus 10%	" M3N
C.4.	0.005 " " plus/minus 10%	" "
C.5.	0.02 " " plus/minus 25%	" CP33N
C.6.	0.02 " " plus/minus 25%	" "
C.7.	100 Pica Farad plus/minus 10%	" SMW
C.8.	100 " " plus/minus 10%	" "
C.9.	800 " " plus/minus 10%	" MAN
C10.	800 " " plus/minus 10%	" "
C11.	180 " " plus/minus 10%	" SM3.
C12.	330 " " plus/minus 5%	" SM2
C13.	400 " " plus/minus 10%	" SMW
C14.	0.01 Micro Farad plus/minus 20%	" M3N
C15.	0.01 " " plus/minus 20%	M4WU
C16.	0.1 " " plus/minus 20%	CP46S
C17.	0.1 " " plus/minus 20%	"
C18.	50 " "	CE61D
C19.	8 " "	CE19P
C20.	0.5 " " plus/minus 20%	CP47N
C21.	0.1 " " plus/minus 20%	CP37N
C22.	0.1 " " plus/minus 20%	"
C23.	0.01 " " plus/minus 20%	M4WU
C24.	2 " " plus/minus 25%	DUB. 412
C25.	400 Pica Farad plus/minus 10%	T.C.C. CMW.
C26.	32 Micro Farad	512
C27.	32 " "	"
C28.	0.05 " " plus/minus 20%	647
C29.	0.05 " " plus/minus 20%	"
C30.	0.005 " " plus/minus 10%	M3N
C31.	180 Pica Farad plus/minus 10%	SMWN
C32.	40 " " plus/minus 20%	CC40Y.

20w. POWER AMPLIFIER

Drawing No. C.415000 - CONTINUED

Details		Parts No.
T1.	Mains Transformer	369002
T2.	O.P. Transformer	498000
T3.	Mon. O.P. Transformer	369003
L1.	Choke 7H at 250 mA.	68000
F2.)	Cartridge Fuse 250mA Belling-	
F3.)	Lee L1055/250mA	
S1.	Speaker Switch	369004
V1a)	ECC 35, 6SL7GT	
V1b)		
V2.	ECC35, 6SL7GT	
V3)		
V4)	KT 66, 6L6G, EL37	
V5)		
V6.	U52, 5U4G, 5X4G	
F1.	Cartridge Fuse 110 mA Belling-Lee L1055/100 mA.	

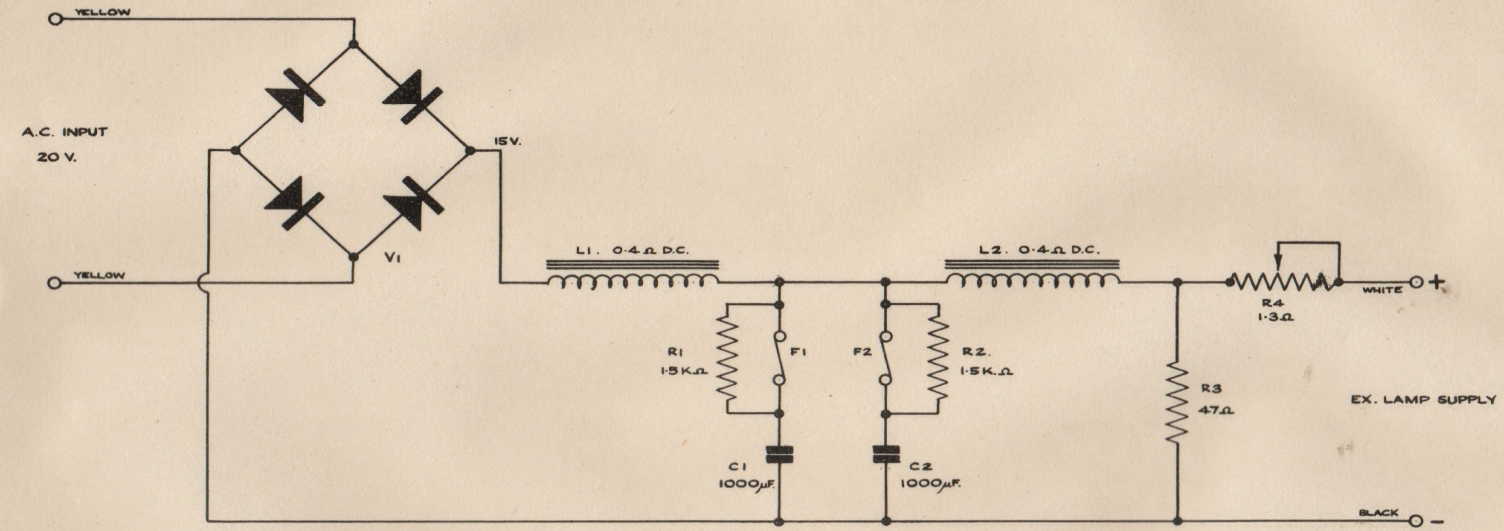

NOTE! IT IS IMPORTANT THAT THE CASES OF C1 & C2 SHOULD BE INSULATED

MODIFICATIONS	
1	Ref's. ADDED. 16-1-48
2	NOTE ADDED Re INSULATION C1 & C2. 25·11·48

DETAIL	PART Nº
R1 1·5K.Ω ±20% N8	RCW8152
R2 1·5K.Ω ±20% N8	— " —
R3 47Ω ±5% LWG	RSA6470
R4 1·3Ω ±10-20% W/Base	RRF6173.
C1 1000μF 25VCE2GCK 2360	
C2 " " "	— " —
L1 30mH 0·4Ω D.C.	395000
L2 " " "	" "
F1 1Amp	FCA.0100
F2 "	— " —
V1 RECT. 12A20	RWZ1220

BRITISH ACOUSTIC FILMS LTD.

SPECIFICATION Nº 416,000		THEORETICAL CIRCUIT, EXCITER LAMP SUPPLY PANEL (20W EQUIP)
USED ON	DATE	
DRAWN BY JGB.	18·12·47	
TRCD. BY		ISSUE Nº 1
CHKD. BY JWCL.		C·416,000
APPD. BY		

EXCITER LAMP SUPPLY PANEL

20w. EQUIPMENT

Drawing No. C.416.000

Details		Part No.
R1.	1500 Ohms plus/minus 20% No.8.	REW 8152
R2.	1500 Ohms plus/minus 20% No.8.	REW 8152
R3.	47 Ohms plus/minus 5% LWS	REA 6470
R4.	1300 Ohms plus 10 minus 20% K2/RAYS	REF.61P3
C1.	1000 Micro Farad 25v. CE23G.	CX.2350
C2.	1000 Micro Farad 25v. CE23G.	CX.2350
L1.	30mH 0.4 Ohms D.C.	395,000
L2.	30mH 0.4 Ohms D.C.	395,000
F1.	1 Amp.	FCA.0100
F2.	1 Amp.	FCA.0100
V1.	Rectifier 12A20	RWZ.12A20

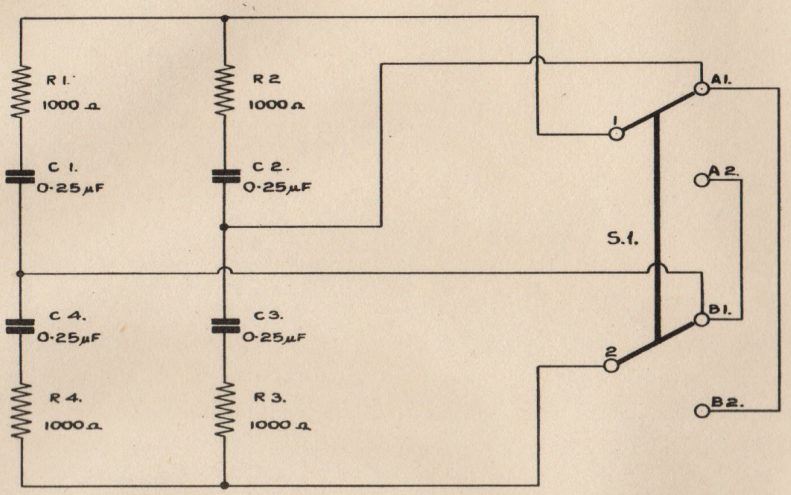

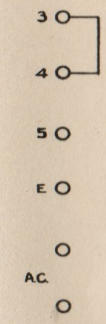

NOTE :
3,4, 5, E & AC REFER TO TERMINAL BLOCK DESIGNATIONS
1,2, A1, A2, B1 & B2 REFER TO SWITCH TERMINALS.

MODIFICATIONS

DETAIL	PART No.
R1 1000Ω ± 20% 1 Watt	CREW 8102
R2 " " "	"
R3 " " "	"
R4 " " "	"
C1 0·25μF ± 25% DUBILIER TYPE 416 250 V.D.C. WKG.	
C2 " "	"
C3 " "	"
C4 " "	"
S1 SANTON ROTARY SWITCH. TYPE SR.125 A	

BRITISH ACOUSTIC FILMS LTD

SPECIFICATION No. 440,000		WIRING DIAGRAM OF EXCITER LAMP CHANGE-OVER BOX
USED ON	DATE	
DRWN BY ~~[illegible]~~	12·3·48	
TRCD BY		ISSUE No. 1
CHKD BY [illegible]		C- 440,000
APPD BY		

EXCITER LAMP CHANGEOVER BOX

Drawing No. C.440.000

Details		Part No.
R1.	1000 Ohms plus/minus 20% ERIE No.8	REW.8102
R2.	1000 Ohms plus/minus 20% " "	REW.8102
R3.	1000 Ohms plus/minus 20% " "	REW.8102
R4.	1000 Ohms plus/minus 20% " "	REW.8102
C1.	0.25 Micro Farad plus/minus 25% DUBILIER Type 418 250v. D.C. Working	
C2.	ditto	ditto
C3.	ditto	ditto
C4.	ditto	ditto
S1.	Switch Rotary Santon Type SR.125A.	

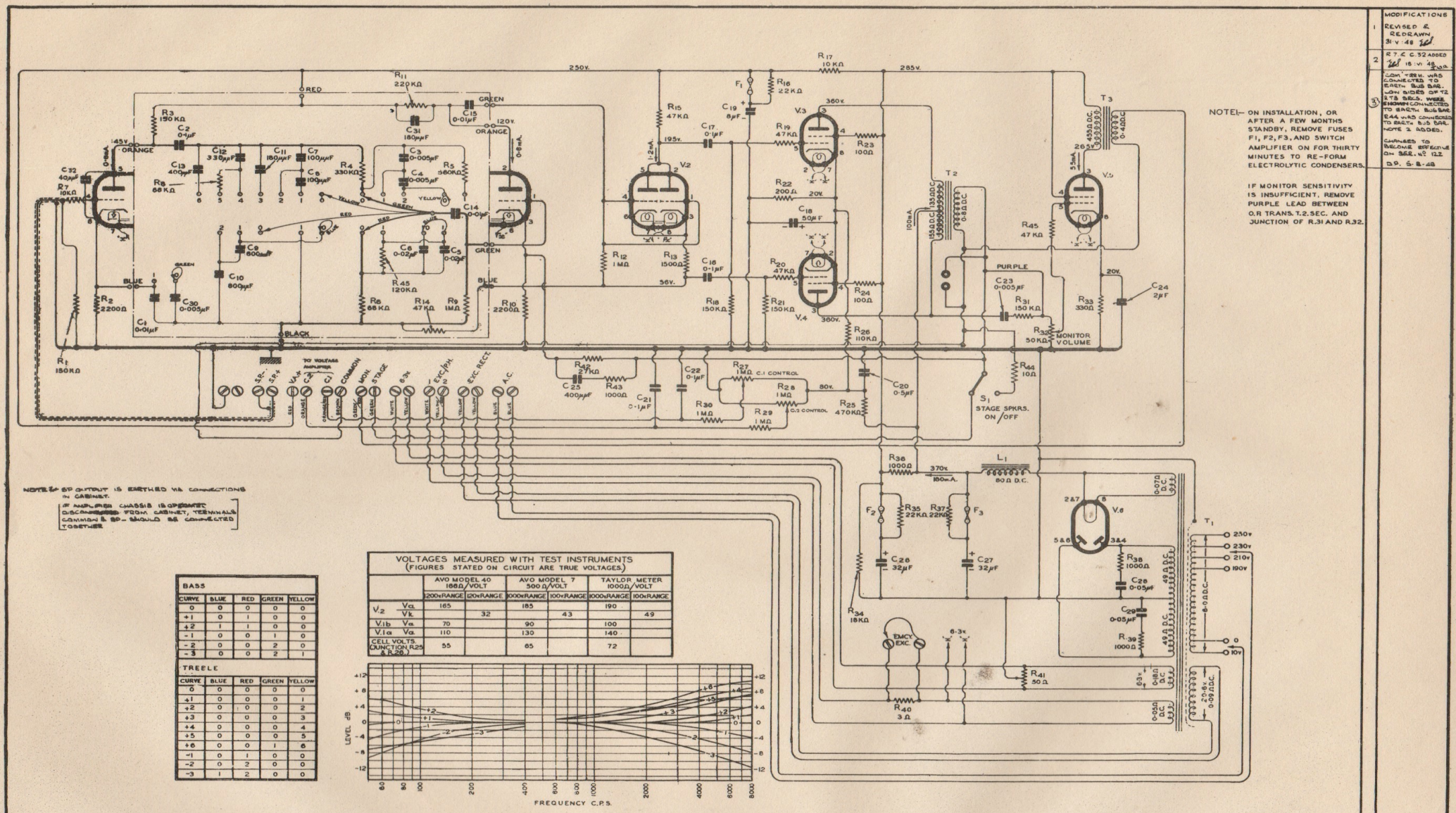

NOTE:— ON INSTALLATION, OR AFTER A FEW MONTHS STANDBY, REMOVE FUSES F1, F2, F3, AND SWITCH AMPLIFIER ON FOR THIRTY MINUTES TO RE-FORM ELECTROLYTIC CONDENSERS.

IF MONITOR SENSITIVITY IS INSUFFICIENT, REMOVE PURPLE LEAD BETWEEN O.R TRANS. T.2. SEC. AND JUNCTION OF R.31 AND R.32.

NOTE:— S.P. OUTPUT IS EARTHED VIA CONNECTIONS IN CABINET.
IF AMPLIFIER CHASSIS IS OPERATED DISCONNECTED FROM CABINET, TERMINALS COMMON & S.P.- SHOULD BE CONNECTED TOGETHER

BASS					
CURVE	BLUE	RED	GREEN	YELLOW	
0	0	0	0	0	
+1	0	1	0	0	
+2	1	1	0	0	
-1	0	0	1	0	
-2	0	0	2	0	
-3	0	0	2	1	

TREELE				
CURVE	BLUE	RED	GREEN	YELLOW
0	0	0	0	0
+1	0	0	0	1
+2	0	0	0	2
+3	0	0	0	3
+4	0	0	0	4
+5	0	0	0	5
+6	0	0	1	6
-1	0	1	0	0
-2	0	2	0	0
-3	1	2	0	0

VOLTAGES MEASURED WITH TEST INSTRUMENTS
(FIGURES STATED ON CIRCUIT ARE TRUE VOLTAGES.)

	AVO MODEL 40 166Ω/VOLT		AVO MODEL 7 500Ω/VOLT		TAYLOR METER 1000Ω/VOLT	
	200v RANGE	120v RANGE	1000v RANGE	100v RANGE	1000v RANGE	100v RANGE
V.2 Va	165		185		190	
V.2 Vk		32		43		49
V.1b Va	70		90		100	
V.1a Va	110		130		140	
CELL VOLTS (JUNCTION R.25 & R.26.)	55		65		72	

MODIFICATIONS	
1	REVISED & REDRAWN 31·V·48
2	R7, C.32 ADDED 15·VI·48
3	COM. TERM. WAS CONNECTED TO EARTH BUS BAR. LOW SIDES OF T2 & T3 SEC'S. WERE SHOWN CONNECTED TO EARTH BUS BAR. R44 WAS CONNECTED TO EARTH BUS BAR. NOTE 3 ADDED. CHANGES TO BECOME EFFECTIVE ON SER. Nº 122
	D.P. 6·8·48

TAG	DETAIL	PART No.
R1	150 KΩ ±20% ERE No.8	-
R2	2200Ω ± 5%	-
R3	150 KΩ ±20%	-
R4	330 KΩ ± 5%	-
R5	560 KΩ ± 5%	-
R6	68 KΩ ± 5%	-
R7	10 KΩ ± 20%	-
R8	68 KΩ ± 5%	-
R9	1 MΩ ±20%	-
R10	2200Ω ± 5%	-
R11	220 KΩ ± 20%	-
R12	1 MΩ ± 20%	-
R13	1500Ω ± 10%	-
R14	47 KΩ ± 5%	-
R15	47 KΩ ± 5%	-
R16	22 KΩ ±20%	-
R17	10 KΩ ± 10%	-
R18	150 KΩ ±20%	-
R19	47 KΩ ± 10%	-
R20	47 KΩ ± 10%	-
R21	150 KΩ ± 20%	WELWYN W.S.B.15
R22	200Ω ± 10%	ERE No.8
R23	100Ω ± 10%	-
R24	100Ω ± 10%	-
R25	470 KΩ ± 5%	-
R26	110 KΩ ± 5%	-
R27	1MΩ POT. CPA	DUBILIER
R28	1MΩ -	±20% ERE No.8
R29	1MΩ	±20% -
R30	1MΩ	±20% -
R31	150 KΩ ± 20%	DUBILIER DPB1.
R32	50 KΩ POT.	DUBILIER DPB1.
R33	330Ω ± 10%	ERE No.8
R34	18 KΩ	WELWYN W.S.B.15 ± 5% AP41
R35	22 KΩ	±20% ERE No.8
R36	1000Ω ± 5%	AW3112
R37	22 KΩ	± 5% ERE No.8
R38	1000Ω	± 20% -
R39	1000Ω	± 20% -
R40	3Ω	BERCO ± 5% WW/NO
R41	50Ω POT.	BERCO DF4.
R42	27 KΩ	± 5% ERE No.8
R43	1000Ω	± 20% - WW3112
R44	10Ω	±10% AW3112
R45	47 KΩ	±20% ERE No.8
C.1	0·01μF	±20% TCC No.3 M3N
C.2	0·1μF	±20% - CP48S
C.3	0·005μF	±10% - M3N
C.4	0·005μF	±10% - -
C.5	0·02μF	±2½% - CP33N
C.6	0·02μF	±2½% - -
C.7	100μμF	±10% - 5MW
C.8	100μμF	±10% - -
C.9	800μμF	±10% - M4N
C.10	800μμF	±10% - -
C.11	180μμF	±10% - 5M3
C.12	330μμF	± 5% - 5M2
C.13	400μμF	±10% - 5MW
C.14	0·01μF	±20% - M3N
C.15	0·01μF	±20% - M4WU
C.16	0·1μF	±20% - CP48S
C.17	0·1μF	±20% - -
C.18	50μF	- CE81D
C.19	8μF	- CE81P
C.20	0·5μF	±20% - CP47N
C.21	0·1μF	±20% - CP37N
C.22	0·1μF	±20% - -
C.23	0·005μF	±20% - M4WU
C.24	2μF	±250Ω AI12 TCC 5MW
C.25	400μμF	±10% TCC 5MW
C.26	32μF	- 5I2
C.27	32μF	- -
C.28	0·05μF	±20% - 847
C.29	0·05μF	±20% - -
C.30	0·005μF	±10% - M3N
C.31	180μμF	±10% - 5MWN
C.32	40μF	±20% CC40Y
T.1	MAINS TRANS.	389.001
T.2	O.P. TRANS.	394.000
T.3	MON. O.P. TRANS.	389.003
L.1	CHOKE 7H at 250mA	68.000
F.1	CARTRIDGE FUSE 250mA. BELLING-LEE L1055/250mA.	
F.2 F.3	CARTRIDGE FUSE 100mA. BELLING-LEE L1055/100mA.	
S.1	SPEAKER SWITCH	389.004
V.1a	ECC35, 6SL7GT	
V.1b	ECC35, 6SL7GT	
V.2	KT66, 6L6G, EL37	
V.3	KT66, 6L6G, EL37	
V.4	U52, 5U4G, 5X4G,	
V.5	CARTRIDGE FUSE	

BRITISH ACOUSTIC FILMS LTD.

SPECIFICATION No. 369,000		THEORETICAL CIRCUIT 20w. POWER AMPLIFIER (190v — 260v) 40 — 100 c/s
USED ON	DATE	
DRAWN BY [illegible]	3·III·48	
TRACED BY [illegible]		ISSUE No. 23
CHECKED BY [illegible]		C-369,000
APPROVED BY [illegible]		

20w. POWER AMPLIFIER

Drawing No. C.369.000.

Details	Part No.
R1. 150,000 Ohms plus/minus 20%	ERIE No.8.
R2. 2200 Ohms plus/minus 5%	" "
R3. 150,000 Ohms plus/minus 20%	" "
R4. 330,000 Ohms plus/minus 5%	" "
R5. 560,000 Ohms plus/minus 5%	" "
R6. 68,000 Ohms plus/minus 5%	" "
R7. 10,000 Ohms plus/minus 20%	" "
R8. 68,000 Ohms plus/minus 5%	" "
R9. 1 Megohm plus/minus 20%	" "
R10. 2200 Ohms plus/minus 5%	" "
R11. 220,000 Ohms plus/minus 20%	" "
R12. 1 Megohm plus/minus 20%	" "
R13. 1500 Ohms plus/minus 10%	" "
R14. 47,000 Ohms plus/minus 5%	" "
R15. 47,000 Ohms plus/minus 5%	" "
R16. 22,000 Ohms plus/minus 20%	" "
R17. 10,000 Ohms plus/minus 10%	" "
R18. 150,000 Ohms plus/minus 20%	" "
R19. 47,000 Ohms plus/minus 10%	" "
R20. 47,000 Ohms plus/minus 10%	" "
R21. 150,000 Ohms plus/minus 20%	" "
R22. 200 Ohms plus/minus 5%	AW3115 WELWYN
R23. 100 Ohms plus/minus 10%	EPIE No.8.
R24. 100 Ohms plus/minus 10%	" "
R25. 470,000 Ohms plus/minus 5%	" "
R26. 110,000 Ohms plus/minus 5%	" "
R27. 1 Megohm Potentiometer CPA.	DUBILIER
R28. 1 Megohm Potentiometer CPA.	DUBILIER
R29. 1 Megohm plus/minus 20%	ERIE No.8.
R30. 1 Megohm plus/minus 20%	" "
R31. 150,000 Ohms plus/minus 20%	" "
R32. 50,000 Ohms Potentiometer CPB.	DUBILIER
R33. 330,000 Ohms plus/minus 10%	ERIE No.1.
R34. 18,000 Ohms plus/minus 5%	AP41. WELWYN
R35. 22,000 Ohms plus/minus 20%	ERIE No.8.
R36. 1000 Ohms plus/minus 5%	AW3112
R37. 22,000 Ohms plus/minus 20%	ERIE No.8.
R38. 1000 Ohms plus/minus 20%	" "
R39. 1000 Ohms plus/minus 20%	" "
R40. 3 Ohms plus/minus 5%	VR/KO BERCO
R41. 50 Ohms Potentiometer	BERCO F.4.
R42. 27,000 Ohms plus/minus 5%	ERIE No.8.
R43. 1000 Ohms plus/minus 20%	" "
R44. 10 Ohms plus/minus 10%	AW 3112 WELWYN
R45. 47,000 Ohms plus/minus 20%	ERIE No.8.
C1. 0.01 Micro Farad plus/minus 20%	T.C.C. M3N
C2. 0.1 Micro Farad plus/minus 20%	" CP46S
C3. 0.005 " Farad plus/minus 10%	" M3N
C4. 0.005 " Farad plus/minus 10%	" "
C5. 0.02 " Farad plus/minus 25%	" CP33N
C6. 0.02 " Farad plus/minus 25%	" "
C7. 100 Pica Farad plus/minus 10%	" SMW
C8. 100 Pica Farad plus/minus 10%	" "
C9. 800 Pica Farad plus/minus 10%	" MAN
C10. 800 Pica Farad plus/minus 10%	" "
C11. 180 Pica Farad plus/minus 10%	" SM3
C12. 330 Pica Farad plus/minus 5%	" SM2
C13. 400 Pica Farad plus/minus 10%	" SMW
C14. 0.01 Micro Farad plus/minus 20%	" M3N
C15. 0.01 Micro Farad plus/minus 20%	M4WU
C16. 0.1 Micro Farad plus/minus 20%	CP46S
C17. 0.1 Micro Farad plus/minus 20%	"
C18. 50 Micro Farad	CE61D
C19. 8 Micro Farad	CE19P
C20. 0.5 Micro Farad plus/minus 20%	CP47N
C21. 0.1 Micro Farad plus/minus 20%	CP37N
C22. 0.1 Micro Farad plus/minus 20%	"
C23. 0.01 Micro Farad plus/minus 20%	M4WU
C24. 2 Micro Farad plus/minus 25%	DUBILIER 412
C25. 400 Pica Farad plus/minus 10%	T.C.C. SMW
C26. 32 Micro Farad	512
C27. 32 Micro Farad	"
C28. 0.05 Micro Farad plus/minus 20%	647
C29. 0.05 Micro Farad plus/minus 20%	"
C30. 0.005 " Farad plus/minus 10%	M3N
C31. 180 Pica Farad plus/minus 10%	SMWN
C32. 40 Pica Farad plus/minus 20%	CC40Y

20w. POWER AMPLIFIER

Drawing No. C.369,000 - CONTINUED

Details		Part No.
T1.	Mains Transformer	369,001
T2.	O.P. Transformer	498,000
T3.	Mon. O.P. Transformer	369,003
L.1	Choke 7H at 250 mA	68,000
F2.) F3.)	Cartridge Fuse 250mA Belling-Lee L1055/250mA	
S1.	Speaker Switch	369,004
V1a) V1b)	ECC 35, 6SL7GT	
V2.	ECC35, 6SL7GT	
V3) V4) V5)	KT.66, 6L6G, EL37.	
V6.	U52, 5U4G, 5X4G	
F1.	Cartridge Fuse 100 mA Belling-	

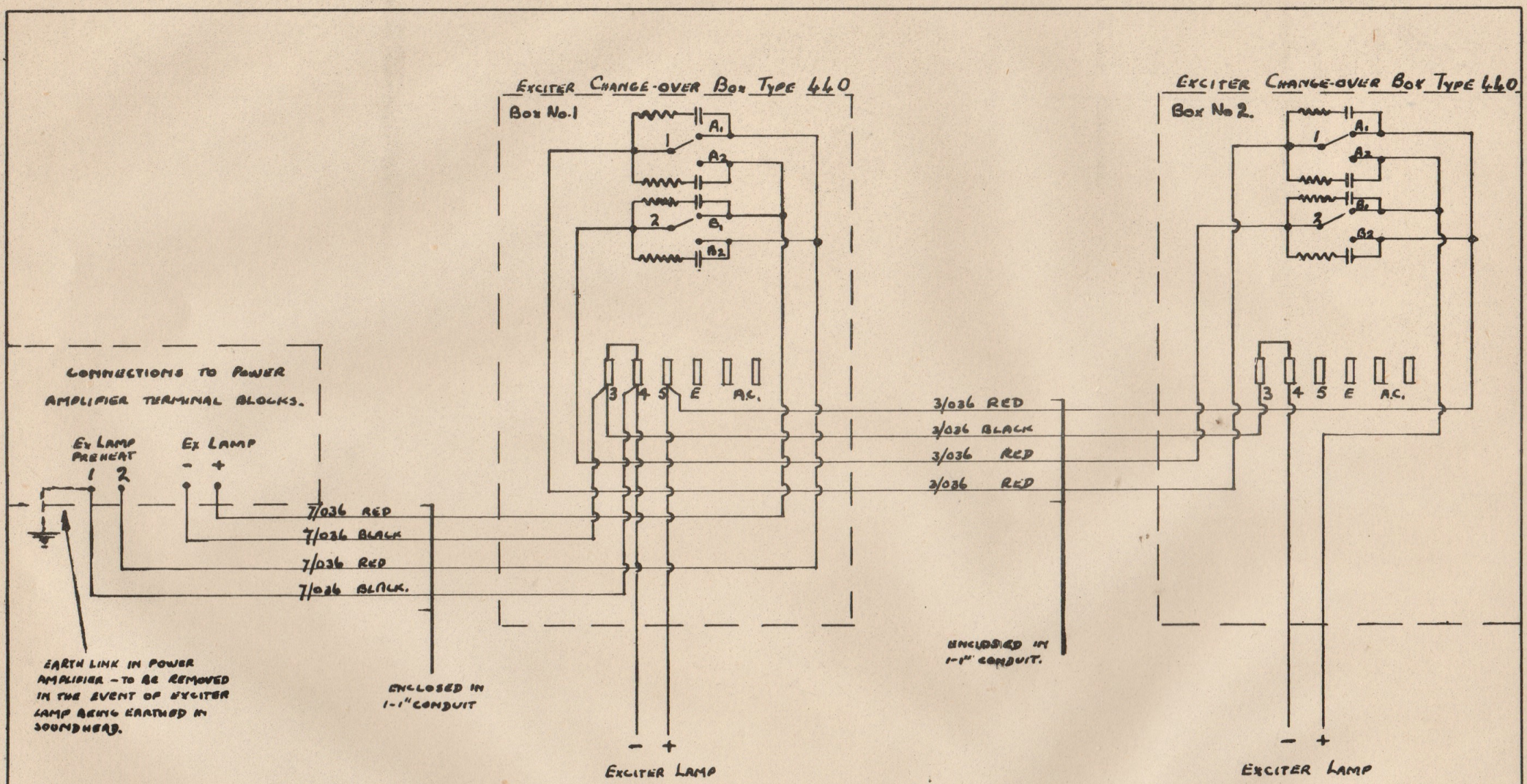

MODIFICATIONS		SCALE FULL SIZE	USED ON ASSY. Nº	TOLERANCES UNLESS STATED ON DECIMAL DIMS. ± ON OTHER DIMS. ±
		V NORMAL MACHINED FINISH		DRN. BY / DATE
		VV GROUND OR FINE MACHINED FINISH		CKD. BY / APPD. BY
		VVV FINE GROUND FINISH WITHOUT WHEELMARKS		MATERIAL / FINISH

BRITISH ACOUSTIC FILMS LTD.

20 WATT. EQUIPMENT
EXCITER LAMP CHANGE-OVER WIRING LAYOUT. I

PART NUMBER Y.12334.

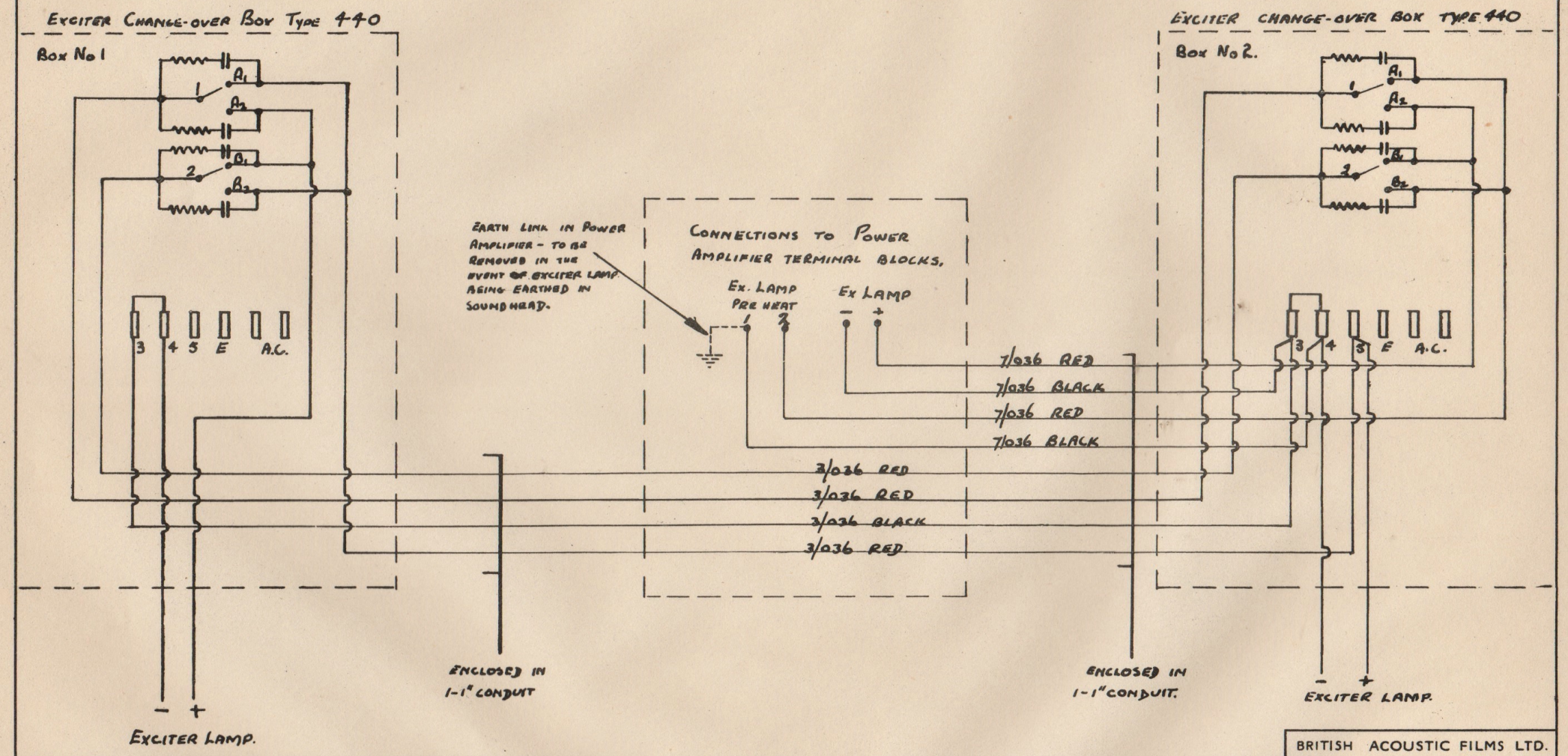

MODIFICATIONS	SCALE FULL SIZE	USED ON ASSY. Nº	TOLERANCES UNLESS STATED ON DECIMAL DIMS. ± ON OTHER DIMS. ±	BRITISH ACOUSTIC FILMS LTD.
	V NORMAL MACHINED FINISH		DRN. BY / DATE	20 WATT EQUIPMENT
	VV GROUND OR FINE MACHINED FINISH		CKD. BY / APPD. BY	EXCITER LAMP CHANGE-OVER WIRING LAYOUT II
	VVV FINE GROUND FINISH WITHOUT WHEELMARKS		MATERIAL / FINISH	PART NUMBER Y.12335.

DUOSONIC SPEAKERS

The range of full Duosonic Speakers comprises five sizes, numbers 0, 1, 2, 3 and 4. The difference between the five sizes is not one of quality, but only of power handling capacity.

The frequency range of all the models is considerably wider than that which it is possible commercially to record on film. For high quality frequency modulated broadcast transmissions the proposed standard is from 50 to 15,000 cycles. Duosonic speakers cover this range.

The smallest model, the No.0, is the most recent addition to the range, and in a number of ways is different in design from the larger models. The cross over frequency of the dividing network is 1000 cycles, and the two bass reproducers are not mounted in a re-entrant or direct flare type horn, but in a Vee fronted reflex cabinet. There is no sound emanation from the back. The all metal multicellular horn, because of the comparatively high cross over frequency, is of short overall length, 15 inches including driving unit. It can only be supplied in a single throated version for use with one treble unit. Only one type of this short multicellular horn, with six cells, has so far been issued, but an eight cell type is being designed. The permanent magnet treble unit is smaller than the type used on the larger speaker assemblies. The diameter of its threaded throat is only 1¼", against 2½" for the large model. The small treble unit, although less sensitive than the large unit, is in other respects of equal performance. The 12" bass units are of the same permanent magnet type as employed in the No.1. Speaker.

The No.0 size speaker has been specifically designed for use in small theatres, and the back to front dimension is the smallest that can be encompassed without sacrifice in performance. Access to the bass units can be obtained from the back and from the sides.

The remaining members of the range, numbers 1 to 4, share a number of features in common. All are of the type with no sound emanation from the back, and all use permanent magnet bass reproducer units in a direct flare type horn. The multicellular horns are of all metal construction, and the treble units have metal diaphragms.

All speakers size 1 to 4 so far issued have had energised treble units, to Specification 513. These units have an 8 volt field winding and a consumption of 3 amperes. A suitable field supply unit, which utilises a Westinghouse selenium rectifier, is provided. This A.C. operated field unit is mounted back stage, with its A.C. supply controlled by a switch in the operating enclosure.

A permanent magnet type of treble unit, of almost identical external appearance and dimensions to the energised model, has been designed and will shortly become available. It will be known as the type 379. Performance and sensitivity of the permanent magnet model will be the same as for the energised model, and physically and electrically the two models will be inter-changeable.

From the inception of the Duosonic speaker in 1936, a dividing network with a cross-over frequency of 375 cycles has been used. The type is still being issued, but already a number of equipments has left the factory with networks having a cross over frequency of 500 cycles. This higher frequency will become the standard. Laboratory and theatre tests have shown that there is no distinguishable difference in quality of reproduction or effectiveness of distribution by reason of raising the cross over frequency to 500 cycles, and the treble units will benefit by not having to handle the material diaphragm excursions corresponding to the reproduction of frequencies below 500 cycles. Both types of network have an attenuation of 12 dB. per octave above and below their respective cross-over frequencies.

Except that speakers size 3 and 4 use treble horns with Y throats to accommodate two treble units, and speakers size 1 and 2 use single throated horns, there is no difference in the type of multicellular horn which accompanies any speaker from number 1 to number 4. The number of cells in the multicellular horn is not determined by speaker or theatre size, but by the horizontal and vertical angles of sound distribution with which the speaker has to cope. In practice it may be found in a small theatre where sight angles much in excess of recommended ones have been tolerated, that a 15 cell horn is required. In a much larger, architect designed theatre, where patrons' comfort has been studied by not exceeding a moderate degree of obliquity in the relationship of any seat and the plane of the screen, an 8 cell horn may be found adequate.

Each cell covers a horizontal and vertical angle of 20 degrees. An eight cell horn therefore covers 80 degrees horizontally and 40 degrees vertically. Horns can be supplied of the single layer type with from three to six cells. Two layer types can have a total of six to twelve cells, and three layer types can have from nine to eighteen. Horns with less than eight cells can be supplied only with single throats. Horns with eight or more cells can have single or Y throats.

The overall length of the treble horn varies slightly with the number of cells. As examples, an eight cell horn measures 3 feet from back of driving unit to front of flare, and a fifteen cell horn measures 3 feet 4 inches.

The direct flare type bass horns, irrespective of size are intended normally for vertical mounting, and are flanked by side wings and surmounted by the multicellular treble horn. In common with the No.0 speaker their design is such that access to the bass speakers can be obtained both via a detachable back panel and via detachable side panels. This feature permits the speaker assembly to go hard up against the wall where clearance between screen and rear wall is tight.

Where structural limitations behind the screen make it necessary, there is no objection to mounting the horn horizontally, and with either vertical or horizontal mounting it is permissible, at the cost of a slight loss in bass response to dispense with the side wings.

Very few cinema theatres today employ rear projection, the total number so equipped is actually smaller than in 1929, but in Great Britain several successful Duosonic installations have been carried out in rear projection theatres. Two identical speaker assemblies, each comprising bass and treble horns, are mounted one on each side of the screen, as close thereto as possible, and there is surprisingly little difference in results with this arrangement as compared with the normal front projection position for the speaker.

The number 1 size speaker employs two 12" permanent magnet moving coil cone speakers, connected in PARALLEL, in a direct flare horn, and one treble driving unit for the multicellular horn. Normally the single treble unit is shunted by a 20 ohm resistance, incorporated in dividing networks type 79, 145, 359 and 443.

The number 2 size speaker has two 15" permanent magnet moving coil cone speakers, connected in SERIES, in a direct flare horn of larger dimensions than the number 1 size. One driving unit, normally shunted by a 20 ohm resistance, is used on the multicellular treble horn.

The number 3 size speaker uses two 15" bass speakers, in series, in a horn of the same dimensions as used in the number 2 speaker. Two driving units are used on a Y throated multicellular treble horn.

The number 4 size speaker employs four 15" speakers, in a bass horn assembly that is virtually two of the direct flare horns used in the number 2 or 3 speaker. The four driving units are connected in SERIES-PARALLEL, and an impedance matching transformer ensures an accurate match with the power amplifier. The multicellular horn has a Y throat and two treble units.

Data on the physical dimensions and electrical characteristics of the various size speakers is given in the following appendices.

APPENDIX A.				WEIGHTS AND DIMENSIONS		
Type of Speaker.	Height.		Depth Back to Front	Width.		Approx. weight complete.
	Bass Horn Only	Including Treble Horn		Without side wings	With side wings.	
No.0.	5'0"	6'0"	1'9"	4'0"	None used	5 cwt.
No.1.	7'0"	9'6"	3'5"	2'6"	6'6"	7 cwt.
No.2.	7'0"	9'6"	3'7"	2'9"	6'9"	8 cwt.
No.3.	7'0"	9'6"	3'7"	2'9"	6'9"	8¼ cwt.
No.4.	7'0"	9'6"	3'7"	5'6"	9'6"	11 cwt.

NOTE: No.0 size speaker can be supplied less bottom skirt panel, when height of bass speaker alone is reduced to 3 feet, and of complete assembly with treble horn, to 4 ft.

Nos. 1,2,3 and 4 speakers. Overall height with treble horn is that with three layer multicellular horn. Height with two layer horn is 7" less.

No.1 size speaker can be supplied without legs, when height of bass speaker alone is reduced to 5'10", and of complete assembly to 8'4".

Nos. 2,3 and 4 speakers. The 7' height dimension is of bass horn proper. Legs are not fitted.

APPENDIX B. POWER HANDLING CAPACITY

Type of Speaker	Power handled Watts.	Seating Capacity	No. of Bass Units	Base Horn	No. of Treble Units
No.0.	20	1000	Two 12" in parallel	Reflex cabinet	One
No.1.	30	1200	Two 12" in parallel	Direct Flare	One
No.2.	40	1500	Two 15" in series	Direct Flare	One
No.3.	60	2750	Two 15" in series	Direct Flare	Two in parallel
No.4.	80	4000	Four 15" in series parallel	Direct Flare	Two in parallel

APPENDIX C. SPEAKER UNITS

Pattern	Energised or P.M.	Speech Coil D.C.Resistance	Speech Coil Impedance
Reslo	P.M.	12 Ohms	15 Ohms
Specification 513	Energised	14	22
Type 379	P.M.	14	22
12" Bass	P.M.	13.5	15
15" Bass	P.M.	2.75	4

APPENDIX D. DIMENSIONS OF TREBLE HORNS

Type of Horn	Height	Width	Length including driving unit.
Miniature 6 cell	10 inches 25.4 cms	1 ft. 3¾ inches. 38 cms.	1 ft. 6 inches 45.7 cms.
Normal 8 cell	1 ft. 4 ins. 40.6 cms	2 ft. 6 inches 76.2 cms	3 foot 91.4 cms
Normal 10 cell	1 ft. 4 ins. 40.6. cms	3 foot. 91.4 cms	3 ft. 2 inches 96.5 cms
Normal 12 cell (6x2)	1 ft. 4 ins. 40.6. cms.	3 ft. 6 inches 106.6 cms.	3 ft. 3 inches 99 cms.
Normal 12 cell (4x3)	2 foot 61 cms.	2 ft. 6 inches 76.2 cms	3 ft. 3 inches 99 cms.
Normal 15 cell	2 foot 61 cms.	3 foot 91.4 cms.	3 ft. 4 inches 101.4 cms.
Normal 18 cell	2 foot 61 cms.	3 ft. 6 inches 106.6. cms	3 ft. 6 inches 106.6. cms.

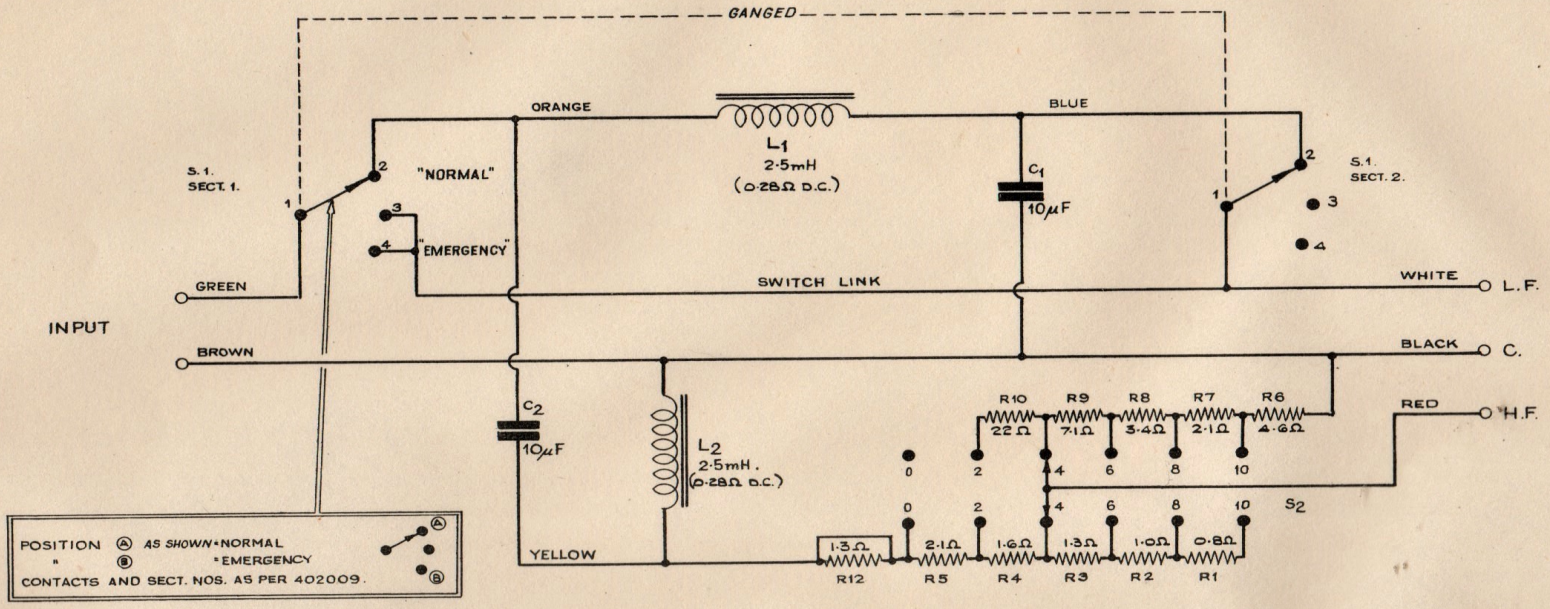

NOTE: THE NOS. 0-10 ON S_2 REFER TO dB ATTENUATION ENGRAVING.

R.12 IS NORMALLY SHORTED OUT AS SHOWN.
TO PROVIDE 1dB ATTENUATION, CUT THE SHORTING LINK.
THE TOTAL ATTENUATION WILL THEN BE SCALE READING + 1.

MODIFICATIONS

DETAIL	PART Nº
C1. 10μF Type 621M	CX1.1411
C2 10μF Type 621M	CX1.1411
L1 CHOKE 2·5mH	402017
L2 CHOKE 2·5mH	402,017
S1 SWITCH ASSY.	402,009
S2 SWITCH ASSY.	355,004
R1 0·8Ω ±5% 4SW 4V	FOR REFERANCE ONLY
R2 1·0Ω " "	
R3 1·3Ω " "	
R4 1·6Ω " "	
R5 2·1Ω " "	
R6 4·6Ω " "	
R7 2·1Ω " "	
R8 3·4Ω " "	
R9 7·1Ω " "	
R10 22Ω " "	
R12 1·3Ω 4SW 14 V ±5%	RWX.21P3

BRITISH ACOUSTIC FILMS LTD

SPECIFICATION Nº 402,000.		CIRCUIT DIAGRAM OF TYPE 402 DIVIDING NETWORK (1000/11)
USED ON	DATE	
DRWN BY L.M.	1·2·48	
TRCD. BY		ISSUE Nº 2.
CHKD. BY		C-402,000.
APPD. BY		

TYPE 402 DIVIDING NETWORK

Drawing No. C.402.000

Details		Part No.
C1.	10 Micro Farad Type 62 IM	CXI.1411
C2.	10 Micro Farad Type 62 IM	CXI.1411
L1.	Choke 2.5 mH	402,017
L2.	Choke 2.5 mH	402,017
S1.	Switch Assembly	402,009
S2.	Switch Assembly	355,004
R1.	0.8 Ohms plus/minus 5% ASW 14V	For Reference Only
R2.	1.0 Ohms plus/minus 5% "	
R3.	1.3 Ohms plus/minus 5% "	
R4.	1.6 Ohms plus/minus 5% "	
R5.	2.1 Ohms plus/minus 5% "	
R6.	4.6 Ohms plus/minus 5% "	
R7.	2.1 Ohms plus/minus 5% "	
R8.	3.4 Ohms plus/minus 5% "	
R9.	7.1 Ohms plus/minus 5% "	
R10.	22 Ohms plus/minus 5% "	
R12.	1.3 Ohms ASW 14V plus/minus 5%	RWX.21P3.

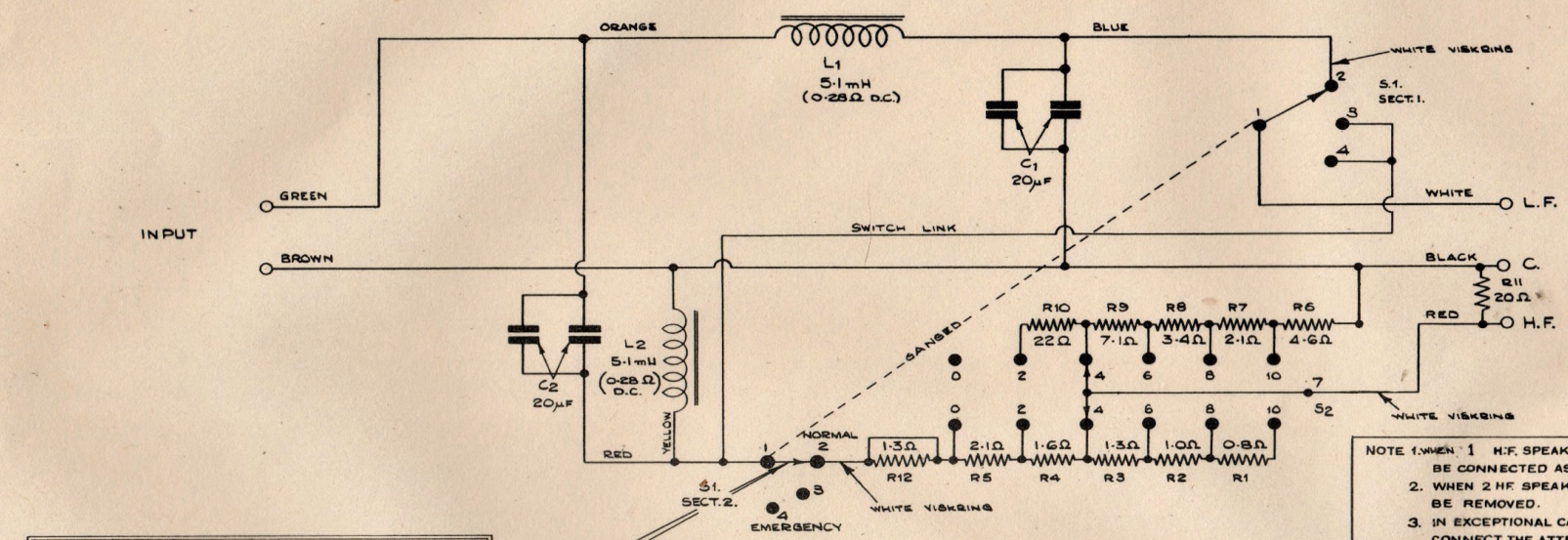

MODIFICATIONS	
1.	R.11. ADDED
2.	NOTES 1.2 & 3 ADDED. 25/5/48 LM
(3)	NOTE 3 ALTERED.
(4)	Nº 7 ON S.2. ADDED.
(5)	R11 REPOSITIONED
(6)	WHITE VISKRINGS ADDED. 28-7-48 D.R

NOTE 1. WHEN 1 H.F. SPEAKER UNIT IS USED, R11 MUST BE CONNECTED AS SHOWN.

2. WHEN 2 HF SPEAKER UNITS ARE USED, R11 MUST BE REMOVED.

3. IN EXCEPTIONAL CASES IT MAY BE NECESSARY TO CONNECT THE ATTENUATOR UNIT IN THE L.F. SPEAKER CIRCUIT; IN WHICH CASE DISCONNECT END OF R12. WITH WHITE VISKRING (AND ITS LINK) FROM S.1. AND RECONNECT TO L1.(BLUE). DISCONNECT BLUE LEAD WITH WHITE VISKRING (FROM TAG Nº2, SECT.1., S.1.,) AND TAPE END. DISCONNECT RED LEAD WITH WHITE VISKRING (FROM TAG Nº7, SECT.1., S.2.) AND CONNECT IT TO TAG FROM WHICH R12. WAS REMOVED (TAG Nº 2, SECT. 2., S.1.). JOIN TAG FROM WHICH BLUE LEAD WAS REMOVED (TAG Nº2, SECT.1., S.1.) TO TAG FROM WHICH RED LEAD WAS REMOVED (TAG Nº7, SECT.1., S.2.).

(NOTES 1 & 2 STILL APPLY)

DETAIL	PART No.
C1 {1Ωf TYPE 62 IM / 1Ωf TYPE 62 IM	CKT 1411 / CKT 1411
C2 {1Ωf TYPE 62 IM / 1Ωf TYPE 62 IM	CKT 1411 / CKT 1411
L1 CHOKE 5·1mH	79003
L2 CHOKE 5·1mH	79003
S1 SWITCH ASSY	402009
S2 SWITCH ASSY	355004
R1 0·8Ω ±5% ASW 1/4W	REF. ONLY
R2 1·0Ω	"
R3 1·3Ω	"
R4 1·6Ω	"
R5 2·1Ω	"
R6 4·6Ω	"
R7 2·1Ω	"
R8 3·4Ω	"
R9 7·1Ω	"
R10 22Ω AW 3112.	"
R11 20Ω	RNC 21P3
R12 1·3Ω ±5% ASW 1/4W	

BRITISH ACOUSTIC FILMS LTD

SPECIFICATION No. 443000		CIRCUIT DIAGRAM OF TYPE 443 DIVIDING NETWORK (500/11)
USED ON	DATE	
DRWN BY D. P.	17·3·48	ISSUE No. 2
TRCD BY		
CHKD BY		C-443000
APPD BY		

DIVIDING NETWORK

TYPE 443

Drawing No. C.443.000

Details		Part No.
C1.	10 Micro Farad type 62 I.M.	CX1.1411
	10 Micro Farad type 62 I.M.	CX1.1411
C2.	10 Micro Farad type 62 I.M.	CX1.1411
	10 Micro Farad type 62 I.M.	CX1.1411
L1.	Choke 5.1 mH	79,003
L2.	Choke 5.1 mH	79,003
S1.	Switch Assembly	402,009
S2.	Switch Assembly	355,004
R1.	0.8 Ohms plus/minus 5% ASW 14v.	REFERENCE ONLY
R2.	1.0 Ohms plus/minus 5% " "	
R3.	1.3 Ohms plus/minus 5% " "	
R4.	1.6 Ohms plus/minus 5% " "	
R5.	2.1 Ohms plus/minus 5% " "	
R6.	4.6 Ohms plus/minus 5% " "	
R7.	2.1 Ohms plus/minus 5% " "	
R8.	3.4 Ohms plus/minus 5% " "	
R9.	7.1 Ohms plus/minus 5% " "	
R10.	22 Ohms plus/minus 5% " "	
R11.	20 Ohms AW 3112	
R.12.1.3	Ohms plus/minus 5% AWS 14v.	RWX 21P3

TUNING OF EQUIPMENTS

When an installation has been completed and a check has been made to see that all mechanical and electrical components are correctly discharging their intended function, tuning of the equipment resolves itself into a matter of setting the overall electrical frequency response in accordance with the standards to be discussed, and adjusting the units of the two way loudspeaker to match the auditorium requirements.

So far as overall electrical response is concerned, the standard adopted is one due to the Academy of Motion Picture Arts and Sciences, and approved by the Society of Motion Picture Engineers.

The characteristics of this Standard Curve are that it is flat from 50 to 2000 cycles, and that it droops with increasing severity from 2000 to 8000 cycles. (It is permissible for the curve to droop below 100 cycles to a maximum of -2½ dB at 50 cycles). The whole curve is as follows, with an over-riding tolerance of plus/minus 1 dB.

CYCLES	LEVEL IN dB
50	0 to minus 2½
100	0
200	0
375	0
600	0
1000	0
2000	0
3000	minus 1½
4000	minus 3
5000	minus 4½
6000	minus 7
7000	minus 10½
8000	minus 18

In practice, it has been found that very slightly better results are obtained if the level at 8000 cycles is only 14 or 15 dB down, but the difference is barely perceptible and the point is of small importance.

The curve, of course, is only suitable for use with modern two way speakers, such as the Duosonic types supplied with Gaumont-Kalee 20 and 21 equipments. With such speakers, departures from the curve will give less than optimum results. A boost below 100 cycles will result in unnatural reproduction of music, and introduce a false boom in the reproduced male voice. The Duosonic speaker maintains its efficiency down to 50 cycles and does not require aid from a "cooked" amplifier curve.

Probably the most important section of the curve is the portion between 3000 and 7000 cycles. Intelligibility and intimacy are preserved by the fairly high level of response at 3000 and 4000 cycles. Any depression of the curve at these frequencies will show up as a deterioration in intelligibility and intimacy. Above 4000 cycles the curve falls with increasing swiftness, until at 8000 cycles it is approaching a sheer vertical descent. The attenuation above 5000 cycles gives reproduction shorn of harshness, over emphasized sibilants, or comb and paper effects. With present standards of film processing and printing, the soundtrack on release prints is not perfect, and the departure from perfection becomes increasingly noticeable above 6000 cycles.

Intelligibility does not depend upon maintaining a high level at the top end of the spectrum, 5000 to 8000 cycles. The important thing is to keep the curve flat up to 2000 cycles, and to depart as little as possible from the standard at 3000, 4000 and 5000 cycles. Above 5000 cycles the curve must show increasingly severe attenuation with increase of frequency, or reproduction will be harsh and unnatural.

With both Gaumont-Kalee 20 and 21 equipments the chosen method of arriving at the Standard Curve is to design amplifiers which with bass and treble controls in the mid or neutral positions will have flat frequency responses, and to use in the soundhead a scanning slit designed to give an output from the photocell in accordance with the requirements of the standard curve. The amplifier chain in addition to its main function of handling the sound on film programme, has also to accept the output of a pick up, and often that of a microphone. If the response curve of the amplifier were shaped to suit a substantially straight line output from the photo-cells, it would require modification to cope with an input from either a pick up or a microphone. It is simpler, and more satisfactory, to maintain a level amplifier response and adjust the response characteristics of the separate types of inputs. So far as film reproduction is concerned, the required results are obtained with a comparatively wide slit which passes increased light to the photocell, with a consequently increased signal voltage available at the input terminals of the amplifier.

Almost irrespective of acoustic properties of individual auditoria, optimum results will be obtained by adherence to the standard curve for electrical frequency response. In many cases, however, it will be necessary to balance the acoustic response of the speakers themselves, and particularly in cinemas where trouble is encountered with sound reflection and uneven distribution, it may be necessary to experiment with different angles of flare on the treble horn, or even to exchange the treble horn for one with

a different number of cells, and in consequence, a different angle of cover.

All type 20 and 21 equipments are provided with a speaker balancing unit which is mounted in a position adjacent to the loud speaker assembly. In some cases, to secure optimum acoustic balance, it will be found necessary to attenuate the response of the treble speakers by some value between 1 and 6 dB. In other cases, the normal speaker response will be found to match the auditorium within very close limits. In exceptional cases, it will be necessary to attenuate the response of the bass speakers before the best acoustic balance is obtained.

With the smallest Duosonic Speaker, No.0 size, the speaker balancing unit is incorporated in the Dividing Network type 402, which has a cross over frequency of 1000 cycles. Irrespective of whether the No.0. Speaker accompanies 20 or 21 equipment, the combined dividing network and balancing unit is mounted backstage.

With the larger Duosonic Speakers, Nos. 1,2,3 or 4, the dividing network, which has a cross over frequency of 375 or 500 cycles, is mounted in the case of 21 equipment on the type 56 rack in the operating enclosure. In the case of 20 equipment, the dividing network is installed back stage. When the dividing network is in the operating enclosure the speaker balancing unit is incorporated in the type 62 Speaker Distribution Box which is the backstage termination for the conduit run. When the dividing network itself is mounted backstage, it incorporates the speaker balancing unit.

As sent out from the Works, the Speaker Balancing Unit is connected in circuit with the treble speaker or speakers, and by adjusting the control knob the whole treble response can be attenuated from 0 to 10 dB. It is unlikely that all the available attenuation will ever be found necessary. In the few instances where an acceptable balance can only be obtained by attenuating the response of the bass speakers, it will be necessary to insert the balancing unit in circuit with the low frequency units.

Before any attempt is made to check the overall frequency response, and to make the final adjustment to acoustic balance of the speakers, it is necessary to ensure that the optical systems of the soundheads are in correct focus. A modern soundhead with a reproducing drum cannot accurately be focussed and adjusted for azimuth by employing a few inches of focussing film. A short length of film does not lie on the drum in the same way as does a longer length which is running through the soundhead. At the very least, if focussing is being carried out by inspection of either the enlarged image or the "iris" effect, it is necessary to use several feet of film and lace it right through projector and soundhead, and then by turning the inching handle ensure that the film adopts the same position in relation to the drum as it would during normal running.

A much better method is to employ several hundred feet of film, or an endless loop, and with a meter coupled to the output terminals of the meter, adjust azimuth and focus until the meter gives a maximum reading.

The scanning slit in the type 83 soundhead gives an equivalent slit width at film of 0.0018 inch, and with the 378 soundhead, which utilises a projected slit type of optical system, the slit width at film is also 0.0018 inch. Strictly the attenuation due to the slit width of 0.0018 inch is 12 dB at 8000 cycles, but this figure is a theoretical one based on the use of a perfect optical system. The actual attenuation at 8000 cycles will in practice be 1 or 1½ dB more, making a total of, say 13½ dB. To this must be added something of the order of 1 dB for cell lead loss, and perhaps 1 dB for amplifier loss at 8000 cycles.

With correctly adjusted sound optics, and treble and bass controls in the mid position, the measured frequency response curve should be from 14 to 15 dB down at 8000 cycles as compared with the reference level at 1000 cycles, and the rest of the curve should nowhere show a greater departure from the standard than 1 dB. Any substantial deviation from the expected response should be investigated and corrected. The trouble may be optical systems not meticulously focussed, or faulty photo cells, or even a test film with a non linear response. Once a close approximation to the standard curve has been obtained, final tuning is only a matter of adjusting the acoustic balance of the two way speaker until by critical listening tests reproduction of average programme material is optimum.

The non synchronous attachment provided with 20 and 21 equipment is intended to be used with an amplifier having a flat, or substantially flat, frequency response, and has inbuilt controls for separate adjustment of treble and bass response. When the tuning of the sound on film channel has been completed, the frequency controls of the non-synchronous attachment should be adjusted to give optimum results on reproduction of gramophone records.

DUAL CHANNEL GAUMONT-KALEE 20 WATT EQUIPMENT

Gaumont-Kalee 20 equipment is available in dual channel form which gives duplication of the complete amplifying chain, including also the main volume control, the film, disc, microphone switch, and the exciter lamp supply unit.

In the dual channel version of the 20 equipment, two separate amplifier channels, 'A' and 'B', are provided, and each channel is complete from photo cell input to power output. The descriptions of pre-amplifiers, method of sound changeover, remote volume control, power amplifier, and exciter lamp supply unit, apply equally to the units comprising dual channel equipment.

Two pre-amplifiers, identical to the type used in the single channel equipment, are housed in a wall fixing steel case which is mounted vertically on the operating box wall between the two projectors. The two pre-amplifiers are disposed one above the other within the case, and separated by a control panel which carries a switch to select either 'A' or 'B' pre-amplifier.

The case is of the same width as the one used to accommodate a single pre-amplifier, but of a little more than twice the overall height. Actual dimensions are 12½" wide, 26" high, and 7½" deep. The complete dual pre-amplifier unit with control panel, in case, is known as type 477. Each separate amplifier is part 384004.

The two external coaxial photo cell leads are terminated at connector blocks on the case of the dual pre-amplifier, and from thence the signal voltages are taken by internal wiring to the switch on the control panel. This selector switch, part number 477015, is a four section type, and the first section, the one nearest the operating knob, switches the two cell leads to either pre-amplifier 'A' or 'B'. The second section switches disc and microphone inputs to either 'A' or 'B'. The third section connects anode positive potential to the photo cells from either 'A' or 'B'. The fourth section is merely a convenience carrying tags to which are anchored resistances and condensers which decouple the cell anode supplies. Operation of the one switch therefore transfers all inputs, film, disc, and microphone, from one pre-amplifier to the other.

Two power amplifiers and two exciter lamp supply units complete the duplicated chain. Two separate steel cabinets each house a power amplifier and an exciter supply unit. The cabinets, type 417, the power amplifiers, type 369, (or type 415 for 95-130 volt supplies), and the exciter supply units type 416 are identical with those used in single channel equipments.

The two cabinets, containing respectively the 'A' and 'B' channels, are intended to be mounted side by side, with the 'A' cabinet on the left of the 'B' cabinet. It will not be practicable to mount them between the two projectors, but they can be positioned anywhere else within the operating box, and the separation between them can be anything from a few inches to the maximum distance permitted by the dimensions of the operating enclosure. If need be, they can be installed outside the enclosure altogether.

The control unit type 478, which is most conveniently fixed on the wall immediately above the 'A' amplifier cabinet, incorporates two on-off switches controlling A.C. supply to the 'A' and 'B' power amplifiers, and a rotary switch for selection of the 'A' and 'B' channels. The rotary switch is a heavy duty, enclosed, four section type, and operation of the switch simultaneously transfers stage speakers, monitor speaker, and exciter lamps to either the 'A' or 'B' channel. The four sections handle respectively stage speakers, monitor speaker, D.C. to exciter lamps, and A.C.(preheating current) to exciter lamps.

There is no switching of signal circuits between pre-amplifiers and power amplifiers, and no switching of high tension and heater supplies between pre- and power amplifiers. The signal output of pre-amplifier 'A', the upper of the two in the dual pre-amplifier, is permanently connected to power amplifier 'A', and high tension and heater supply circuits for pre-amplifier 'A' are permanently connected to power amplifier 'A'. Similarly, pre-amplifier 'B', in respect of signal, high tension, and heater circuits, is permanently connected to power amplifier 'B'.

In operation, if any fault develops in the channel in use, whether in the main volume control, the film, disc, microphone switch, any part of the amplifier chain, or the exciter lamp supply unit, it is only necessary to throw over the two rotary switches, one on the panel which divides the two pre-amplifiers, and the other in the 478 control box, and a complete new channel is brought into use.

It is recommended that the practice be adopted of employing the alternative channels on alternative weeks. This will ensure a constant check on the performance of the two channels, and prevent the possibility of electrolytic condensers lying unused for long periods.

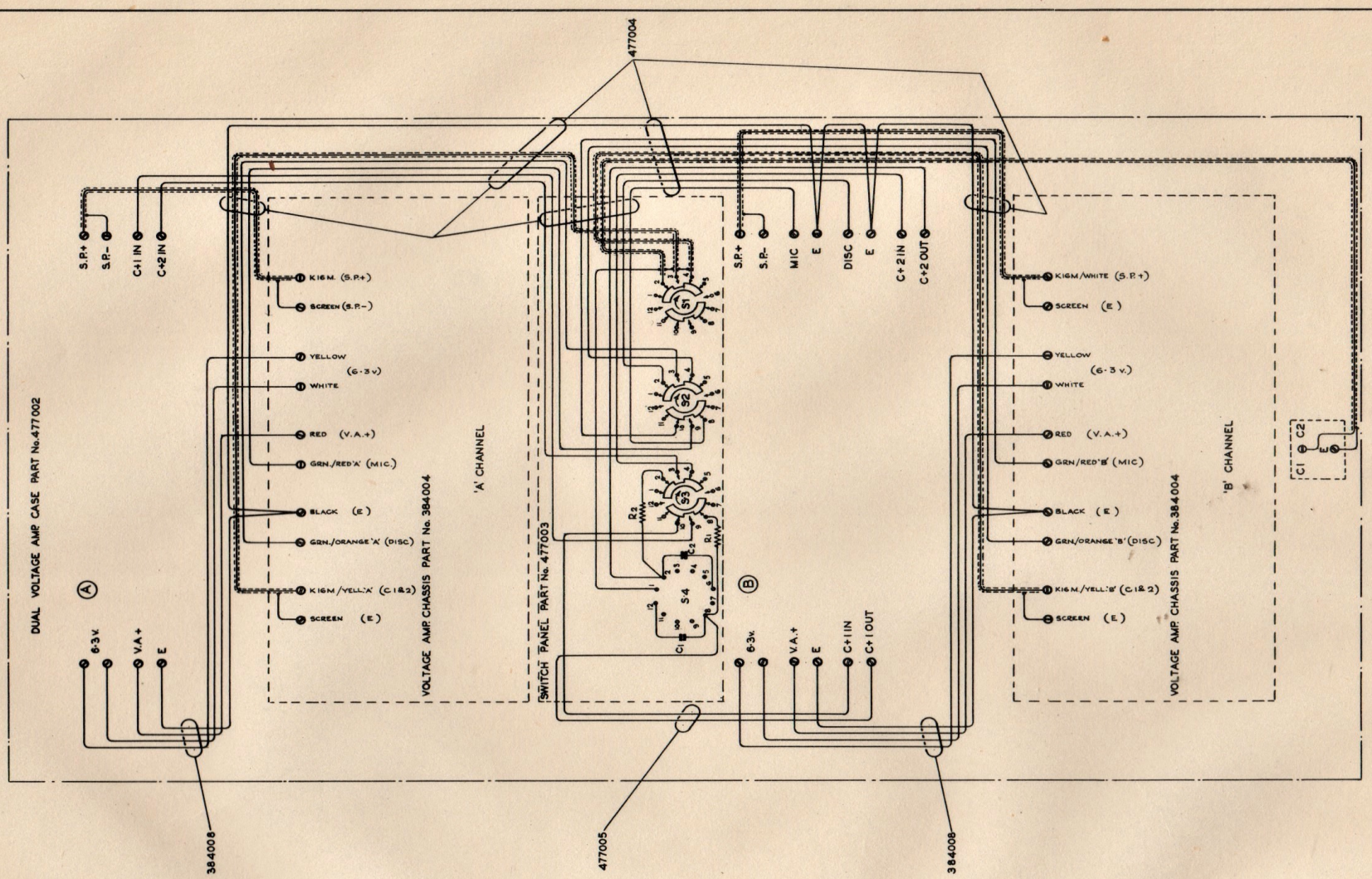

MODIFICATIONS

DETAIL	PART No.
R.1 1MΩ ±20% No.8	
R.2 1MΩ ±20% No.8	
C.1 0·01μF ±15% M3N	
C.2 0·01μF ±15% M3N	
S.1 S.2 S.3 S.4	477015
	N.S.F. OAK 'H'
	NOTE :- SWITCH COMPLETE WITH ITEMS R.1, R.2, C.1, C.2.

AMP CHANGEOVER SWITCH.

ALL SECTIONS VIEWED FROM KNOB END OF SWITCH. ROTORS SHOWN IN EXTREME COUNTER CLOCKWISE POSITION i.e. ('B' CHANNEL OPERATING) TOTAL MOVEMENT — ONE POSITION ('A' CHANNEL OPERATING)

SWITCH LINKED AS FOLLOWS —

S.1.	S2 &3.	S.4
1-4-7-10	1-4	1-12-6
2-5-8-11	2-5	
3-6-9-12	3-6	
	7-10	
	8-11	
	9-12	

S.1 2 &3 PARALLELED FROM FRONT TO REAR OF EACH SECTION. NOS. SHOWN AGAINST EACH SECTION REFER TO CONTACT NOS. ONLY.

SWITCH WIRING COLOUR CODE.

S.1.	2.	K16M	S.3	2. R.2
	3.	K16M/YELL.'A'		3. ORANGE/ORANGE 'A'
	4.	K16M/YELL.'B'		4. ORANGE/ORANGE 'B'
S.2.	2.	GRN./ORANGE		8. R.1
	3.	GRN./ORANGE 'A'		9. ORANGE/RED 'A'
	4.	GRN./ORANGE 'B'		10. ORANGE/RED 'B'
	8.	GRN./RED	S.4	1 E.
	9.	GRN./RED 'A'		2. ORANGE
	10.	GRN./RED 'B'		8. ORANGE/RED

BRITISH ACOUSTIC FILMS LTD

SPECIFICATION No.		SCHEMATIC DIAGRAM DUAL CHANNEL 20w. VOLTAGE AMPLIFIER. TYPE 477.
USED ON	DATE	
DRWN BY Ed.	18 : VIII : 48	
TRCD BY		ISSUE No.
CHKD BY		C-477 000
APPD BY		

DUAL CHANNEL 20w. VOLTAGE AMPLIFIER

TYPE 477

Drawing No. C.477000

		PART NO.
R1.	1 Megohm plus/minus 20% No.8.	
R2.	1 Megohm plus/minus 20% No.8.	
C1.	0.01 Micro Farad plus/minus 15% M3N	
C2.	0.01 Micro Farad plus/minus 15% M3N	
S1) S2) S3) S4)	N.S.F. Oak 'H'	477015

NOTE: Switch Complete With Items R1,R2, C1, C2.

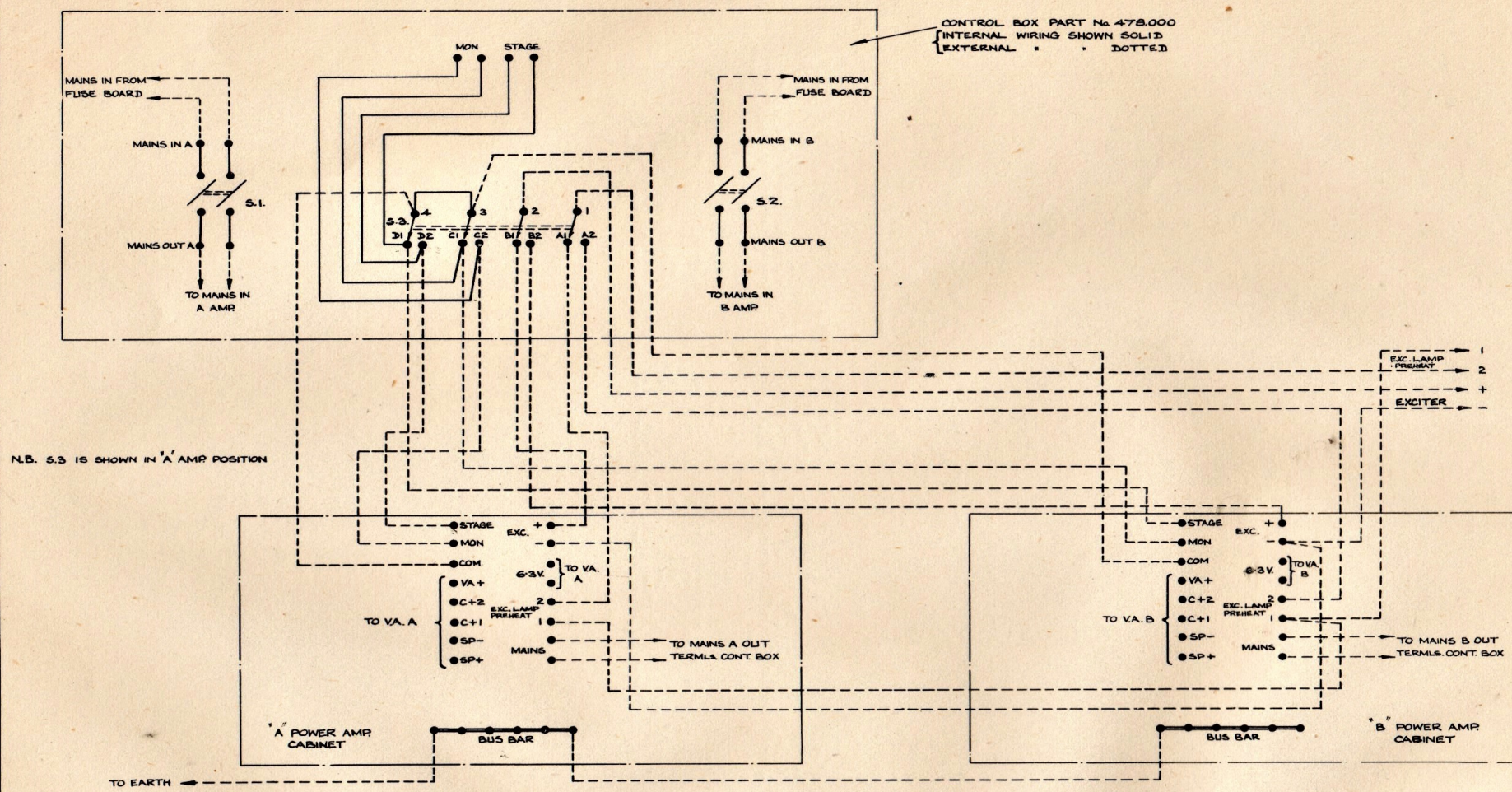

MODIFICATIONS

PART No.	DETAIL
	S.1. & S.2. SWITCH. DIAMOND H TYPE 2 T
	S.3. SWITCH. SANTON TYPE SR.1.48 A.

BRITISH ACOUSTIC FILMS LTD

SPECIFICATION No. 478.000

DUP. 20 W. AMP. CONTROL BOX CONNECTIONS SHOWING EXTERIOR WIRING

USED ON	DATE
DRWN BY A.D.	9.8.48
TRCD BY	
CHKD BY	
APPD BY	

ISSUE No. 1

C- 478,000

DRAWING No. C.478.000

DUP. 20W. AMP. CONTROL BOX CONNECTIONS
SHOWING EXTERIOR WIRING

Details

S1. Switch Diamond H. Type 2T.

S3. Switch. Santon. Type SR.149A.

40 WATT GAUMONT-KALEE 20 EQUIPMENT

In addition to Single Channel Gaumont-Kalee 20 equipment, and Dual Channel equipment, another version of Gaumont-Kalee 20 equipment, with a power output of 40 watts, has been added to the range.

This 40 watt output is realised by coupling together two normal 20 watt amplifiers. Except for a new control unit, type 476, the 40 watt model is identical with the dual channel model. That is to say, there are two voltage amplifiers in a common case which also houses the voltage amplifier selector switch, and there are two power amplifier cabinets each of which contains a Power Amplifier and an exciter lamp supply unit. This new equipment is both a 40 watt model and at the same time a completely duplicated 20 watt model.

On the vertical front panel of the 476 control unit are the following:-

Two mains on-off switches for power amplifiers A and B, with neon indicator lamps to show which amplifier is on.
An input selector switch.
An output selector switch.
A switch to select which of the two exciter lamp supply units is to be used.
A power level meter and switch.

If a total of 40 watts output is required, both mains switches must be on, so that both power amplifiers will give an output, the input switch must be set to select whichever of the voltage amplifiers is to be used, and the output switch must be set to the position 'A & B', so that the coupled outputs of the two power amplifiers may be available to the auditorium loud speaker. It is immaterial whether the exciter lamp supply selector switch be set to 'A' or 'B', as either supply unit will give the necessary output with the two mains switches on.

In addition, of course, to providing for a 40 watt output, the controls can be set to give 20 watts from either channel 'A' or channel 'B'. If only a 20 watt output is wanted, only one of the mains switches should be in the on position. If the 'A' mains switch is put on, then input, output, and exciter switches should all be turned to 'A'. Conversely, if the 'B' mains switch is put on, all the other switches should be set to 'B'.

If 'A' power amplifier is used alone, then the switch on the small panel separating the two voltage amplifiers must also be set to 'A', and if 'B' power amplifier is used alone, the voltage amplifier switch must be set to 'B'. When the two power amplifiers are coupled to give 40 watts, either voltage amplifier may be used.

Correct matching between the power amplifiers and the speaker load is preserved in all three positions of the output selector switch. When only one amplifier is in use, the switch connects the output direct to the speaker. When the switch is in the position 'A & B' the coupled outputs are connected to the speaker via an impedance matching transformer within the 476 unit.

Engraved on the front panel of the 476 unit, adjacent to the output selector switch, is the following. "Do not operate with output selector on A & B unless input is also on A & B and both amplifiers are working". The reasons for this advice are fairly obvious. If both amplifiers are switched on, and an input signal connected to only one, it will be impossible to obtain 40 watts output. In fact, it will not be possible to obtain even 20 watts, because the output stage of the amplifier to which no signal is connected will appear as a shunt across the loudspeaker line and absorb power from the working amplifier. If one amplifier is switched off, then again 20 watts will not be realised because the 'A & B' position of the output switch introduced the matching transformer, which will result in incorrect matching with only one power amplifier in use.

Two monitor speakers are provided with the 40 watt version of G.K.20 equipment, and operation of the output selector switch automatically connects the monitors appropriately to the monitor output stages. With the switch in either the 'A' or 'B' position, the two monitors are connected via an impedance matching transformer, within the 476 unit, to the monitor stage of the amplifier in use. In the 40 watt position, one monitor is directly connected to the 'A' monitor stage, and the other monitor is directly connected to the 'B' monitor stage. Failure of either of the power channels will thus immediately be reflected by failure of sound from one of the monitor speakers.

The meter and switch will be found useful for a number of measurements and tests. The meter is calibrated 12 to 36 dB, and the calibration refers to the generally accepted standard of 0dB = 6 milliwatts. A deflection of 30 dB therefore indicates a power of 6 watts into the designed load of 10 Ohms. The switch enables the meter to be connected to the output of either power amplifier. The meter will permit of frequency response curves being taken for either channel without the necessity for any additional or external measuring equipment. To check the frequency response of, say, A channel, the A voltage amplifier is selected by the voltage amplifier switch, the input and exciter selector switches are also set to A, but the output selector switch is set to B. The reason for the apparently anomalous position of the output switch is that a truer measurement of frequency response will be obtained with the amplifier working into a

purely resistive load than working into the speaker load, the impedance of which varies with frequency. When the output switch is set to B, a 10 Ohm resistance load is put across the output of amplifier A, and similarly when set to A, the 10 Ohm resistance is put across B. If, with the switches in the appropriate positions, the signal input is adjusted to give a meter deflection of 30 dB at the reference frequency of 1000 cycles, a range of plus 6 and minus 18 dB will be available on the meter scale, more than enough to cover the requirements of the standard response curve for sound on film reproduction.

When the equipment is working in the 40 watt position, the meter can be used to check that both power amplifiers are functioning correctly. With the input switch on 'A & B' the output and meter switches should be set first on 'A' and then on 'B', Similar meter deflections should be obtained in the two positions. Meter readings would of course be obtained on both 'A' and 'B' positions of the meter switch by leaving the output switch in the 'A & B' position, but as the amplifiers would be in parallel such readings would be valueless because there would be the same reading in both positions of the meter switch even though one amplifier has ceased working.

It has not been found necessary to incorporate gain controls to balance the sensitivity of two power amplifiers, because the difference between any two specimens will not result in the actual power realised being more than 1 dB below the nominal maximum obtainable. It is necessary, of course, to adjust the frequency response controls of the two amplifiers to the same settings.

Drawing DV.5164 shows the layout of the complete equipment in an operating enclosure, and it will be seen that the recommended position of the 476 control unit is directly above the A power amplifier cabinet, as with the 478 control unit of the dual channel equipment.

The 476 control unit is housed in a sheet metal case approximately 15 inches wide, by 15 inches high, by 7½" deep, (38 cms. x 38 cms. x 19 cms), and the design is such as to facilitate both initial installation and subsequent maintenance. All the components, with the exception of the terminal blocks to which external connections are made, are carried on the front panel. The terminal blocks are carried on a sub-panel which is screwed to brackets on the back of the case, and permanent cable forms, clipped to the bottom of the case, link the terminal blocks to the components on the front panel. When the unit is being installed, the screws holding the terminal panel and the screws securing the cable forms to the case can be removed, and the front panel, with cable forms and terminal panel attached, taken out as a unit without disturbing any interconnecting wiring. The interior of the case is then empty, making as easy as possible the entry of conduit and external wiring.

For service purposes accessibility is of a high order. By removing the securing screws, the front panel can be dropped forward out of its case, and brackets then hold the panel in the open position. The function of the unit is not disturbed by dropping the panel down, but all the components and wiring are exposed for inspection and test. If any repair work is to be undertaken, it is desirable to switch off the A.C.supply, so that there may be no possibility of contact with terminal across which a mains voltage appears.

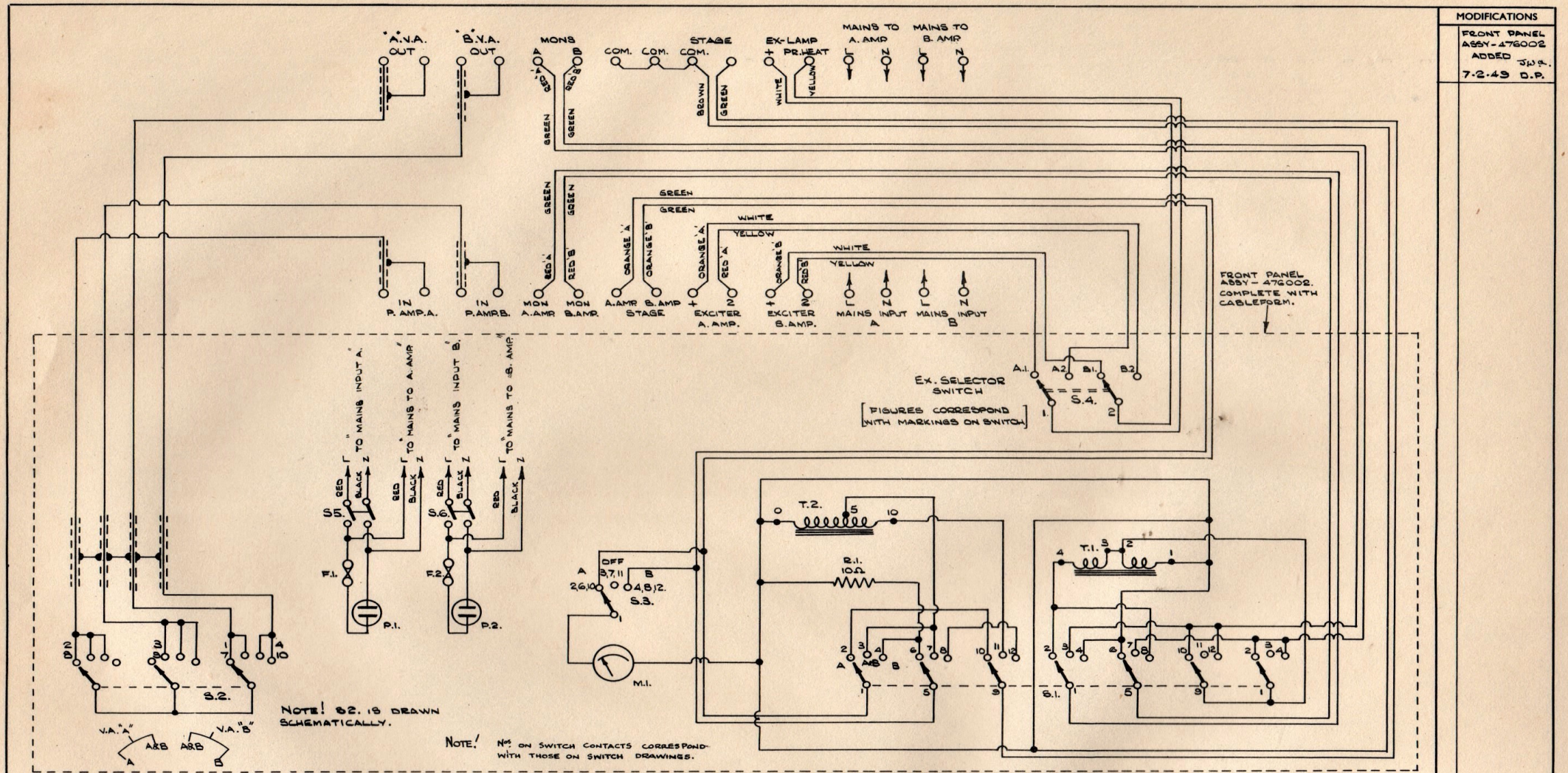

MODIFICATIONS
FRONT PANEL ASSY - 476002 ADDED J.W.A. 7-2-49 D.P.

DETAIL		PART No.
R.1.	10Ω 5 W.W.	RES 4100
S.1.	OAK 'H' TYPE	476031
S.2.	OAK 'H' TYPE	476035
S.3.	OAK 'H' TYPE	347022
S.4.	SANTON TYPE SQ 125 A.	
S.5.	DIAMOND 'H' TYPE 2T.	SWD. 2T.
S.6.	DIAMOND 'H' TYPE 2T.	SWD. 2T.
T.1.	MON. XFORMER	476001
T.2.	AUTO. XFORMER	348000
P.1. & P.2.	NEON INDICATOR LAMP 85-130 V. OR 230-240 V.	LIN.1110 LIN 1230
F.1.	1055/2AMP	FCA.0200
F.2.	1055/2AMP	FCA.0200
M.1.	METER - 15-5W F.S.D.	347020

BRITISH ACOUSTIC FILMS LTD

SPECIFICATION No. 476		CIRCUIT DIAGRAM OF CONTROL BOX FOR 40W. EQUIP.
USED ON	DATE	
DRWN BY D.P.	29-9-48	
TRCD BY		ISSUE No. 12
CHKD BY J.W.A.		C-476000
APPD BY		

CONTROL BOX FOR 40w. EQUIPMENT

Drawing No. C.476000

Details	Part No.
R1. 10 Ohm K,I.V.R.10.	RED 4100
S1. Oak 'H' Type	476031
S2. Oak 'H' Type	476035
S3. Oak 'H' Type	347022
S4. Santon type SR.125A	
S5. Diamond 'H' type 2T	SWD 2T
S6. Diamond 'H' type 2T	SWD 2T
T1. Mon Transformer	476001
T2. Auto Transformer	348000
P1 Neon Indicator Lamp and 95-130v. or P2 230-240v.	LIN.1110 LIN.1230
F1. 1055/2 Amp	FCA 0200
F2. 1055/2 Amp	FCA 0200
M1. Meter 15.5v F.S.D.	347020

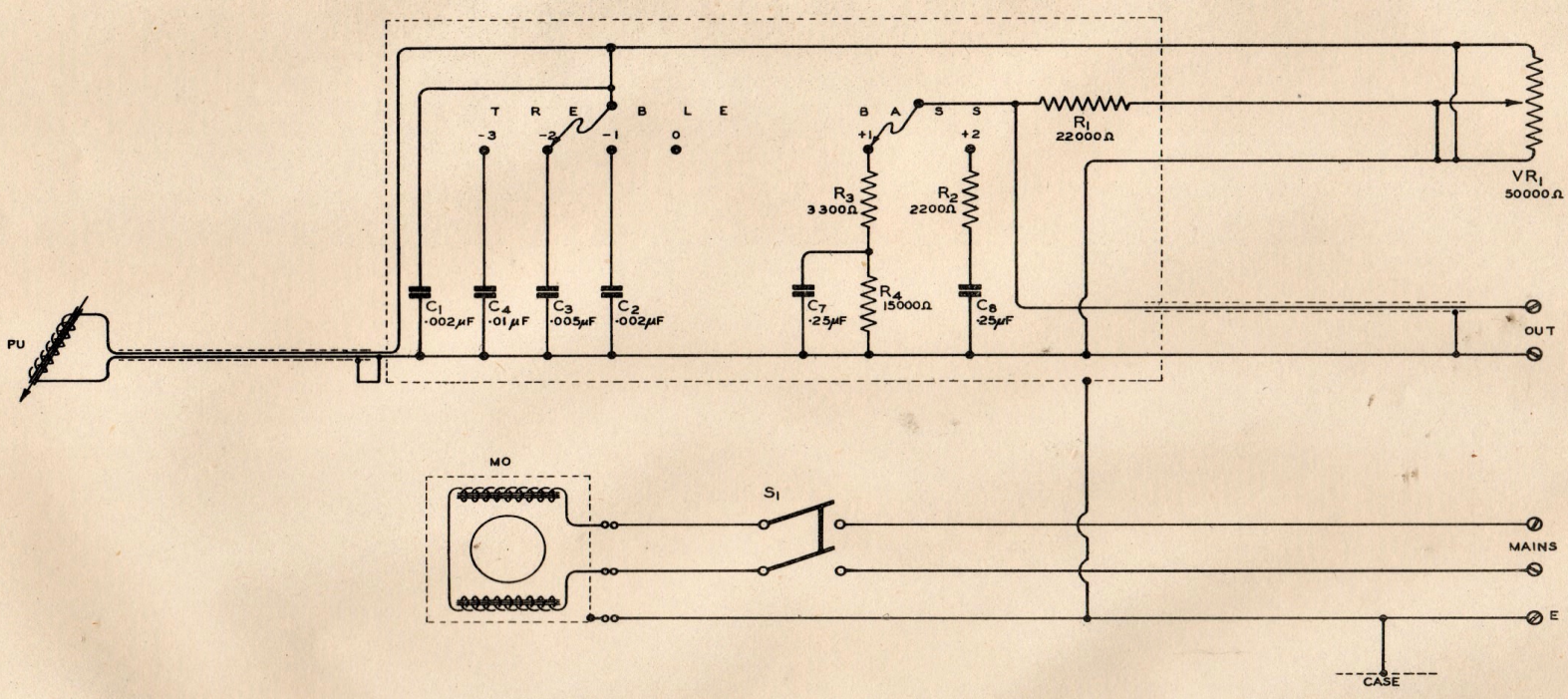

MODIFICATIONS

SCREENS DELETED D.P. 21·7·47

DETAIL	PART NO.
C1 ·002μF SMP 501	CX 1511
C2 ·002μF SMP 501	CX 1511
C3 ·002μF SMP 801	CX 1685
C4 ·01 μF SMP 901	CX 1699
C5	
C6	
C7 ·25μF CP45N	CX 1825
C8 ·25μF CP45N	CX 1825
R1 22000Ω 10 No8	REX 8223
R2 2200Ω " "	" 8222
R3 3300Ω " "	" 8332
R4 15000Ω " "	" 8153
VR1 50000Ω	POD 8503
S1. SWITCH D.P.S.T.	
P.U. PICK-UP GARRARD 20	
MO. MOTOR GARRARD AC7A	

THEORETICAL CIRCUIT
NON SYNC.

DATE	15:VIII:46	SPEC. NO.	84000
DRAWN	[illegible]	PLATE NO.	
TRACED	[illegible]	DRG. NO.	84000-C
CHECKED	[illegible]		
APPROVED	[illegible]		

BRITISH ACOUSTIC FILMS LTD.

NON-SYNC

Drawing No. C.84.000

Details	Part No.
C1. .002 Micro Farad SMP 501	CX 1511
C2. .002 Micro Farad SMP 501	CX 1511
C3. .002 Micro Farad SMP 601	CX 1685
C4. .01 Micro Farad SMP 901	CX 1699
C7. .25 Micro Farad CP45N	CX 1825
C8. .25 Micro Farad CP45N	CX 1825
R1. 22,000 Ohms 10 No.8.	REX 8223
R2. 2,200 Ohms 10 No.8.	REX 8222
R3. 3,300 Ohms 10 No.8.	REX 8332
R4. 15,000 Ohms 10 No.8.	REX 8153
VR1.50,000 Ohms	POD 6503
S1. Switch D.P.S.T.	
P.U. Pick-up Garrard 20	
MO. Motor Garrard AC7A	

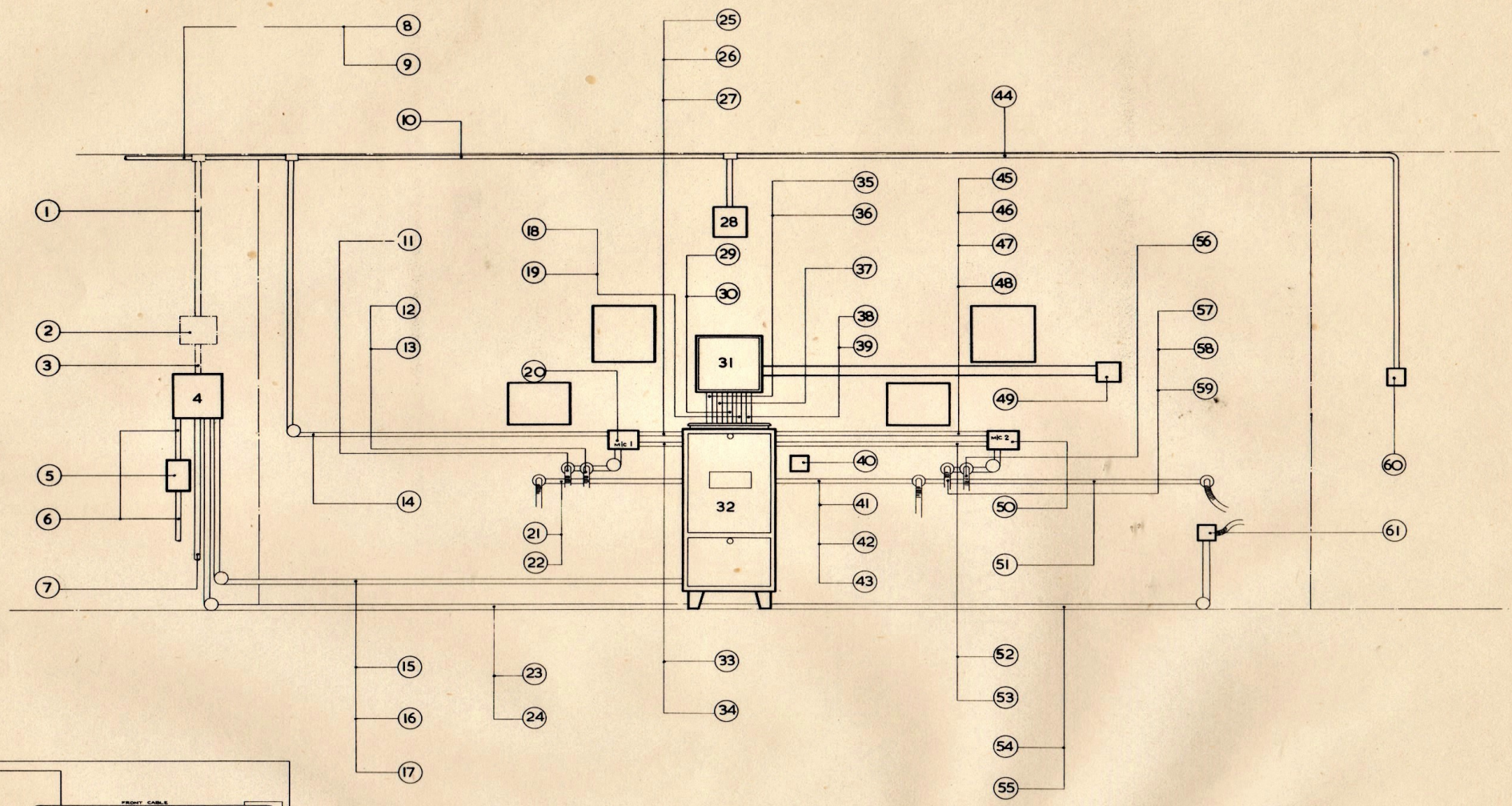

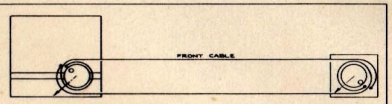

DIAGRAM SHOWING LACING OF BOWDEN WIRES FOR REMOTE CONTROL
(V.A FADER POINTER AT ZERO)

POWER AMP UNIT ASSY 95-130V 40-100 c/s - TYPE 413
POWER AMP UNIT ASSY 190-260V 40-100 c/s - TYPE 414

SEE ACCOMPANYING NOTES.

MODIFICATIONS

BRITISH ACOUSTIC FILMS LTD

TYPICAL LAYOUT OF PROJECTION ENCLOSURE (FOR SINGLE CHANNEL)

PART NUMBER DV 5153.

LAYOUT OF PROJECTION ENCLOSURE (20w. SINGLE)

WS.1 2-Wires 3/036 (1 Red, 1 Black).
From Field Meter Switch Unit to Field Rectifier.
(When required).

WS.2. Field Meter Switch Unit type 451 (When required).

WS.3. 2-Wires 3/036 (1 Red, 1 Black).
From Fuse Unit to Field Meter Switch Unit.
(When required).

WS.4. 6-Way Fuse Board.

WS.5. 30 Amperes Switch Fuse.

WS.6. 2-Wires 7/036 (1 Red, 1 Black) A.C.Supply.

WS.7. 1-Wire 7/036 (Black)
Main Earth cable to rising water main or buried earth.

WS.8. 2-Wires 3/036 (1 Red, 1 Black)
1 Red from "Stage" terminal in Power Amplifier
to Stage Speakers.
1 Black from "E" terminal in Power Amplifier to Stage
Speakers.

WS.9. 2-Wires 3/036 (1 Red, 1 Black) from Field Meter Switch
Unit to Field Rectifier (When required).

WS.10. 2-Wires 3/036 (1 Red,1 Black)
1 Red from "Mon" terminal in Power Amplifier to Monitor
Speaker.
1 Black from "E" terminal in Power Amplifier to Mon. Speaker.

WS.11. 1-4/Core 16/012 P.V.C. (Black, White, Blue, Red).
Black from No.4. in Changeover Switch Unit "1" to
EXC. Lamp Neg. M/C1.
White from A2 and B1 on Changeover Switch in Changeover
Switch Unit "1" to EXC. Lamp Pos. M/C1.
Blue and Red from Mains terminals in Changeover Switch
Unit "1" to Motor Switch (via "Pyrene" Cut-out if fitted).

WS.12. 1-Wire 7/036 (Black)
Earth from "E" terminal in Changeover Switch Unit "1"
to Pedestal M/C1.

WS.13. 3-Wires 16/012 P.V.C.(1 Green, 1 Yellow, 1 Blue)
Changeover Intermediates M/C1 to M/C2 (When required)

WS.14. 4-Wires 3/036 (2 Red, 2 Black).
1 Red from "Stage" terminal in Power Amplifier to Stage
Speakers.
1 Red from "Mon"terminal in Power Amplifier to Mon.Speaker.
2 Black from "E" terminal in Power Amplifier 1 to Stage
Speakers and 1 to Mon. Speaker.

WS.15. 6-Wires 3/036 (3 Red, 3 Black) A.C.From Fuse Unit.
1 Pair (A.C.M/C1) to Mains terminals in Changeover
Switch Unit "1".
1 Pair (A.C.M/C2) to Mains terminals in Changeover
Switch Unit "2".
1 Pair (A.C.Amplifier) to Switch Box Unit(Amplifier Switch.)

WS.16. 1-Wire 7/036 (Black)
Earth from Fuse Unit to earth.
Bus-Bar in Power Amplifier.

WS.17. 1-Wire 3/036 (Red)
From Fuse Unit (Line) to M/C2 Changeover Magnet
feed via Changeover Switch Unit "2" (When required).

WS.18. 2-Wires 3/036 (Red)
1 From "C plus 1 IN" in Voltage Amplifier to "C plus 1" in
Power Amplifier.
1 From "C plus 2 IN" in Voltage Amplifier to "C plus 2" in
Power Amplifier.

WS.19. 1-Wire 14/0076 P.V.C. Insulated, Screened P.V.C.Sheathed.
From "SP plus" in Voltage Amplifier to "SP plus" in Power Amplifier
Connect Screen to "SP minus" in Voltage Amplifier and Power Amplifier.

WS.20. Changeover Switch Unit type 440.

WS.21. 1-Co-Axial Type 129.
From P.E.C.Cathode M/C1 to C1 on Voltage Amplifier
(Connect Screen to "E" except as in Note 2)

WS.22. 1-Wire 16/012 P.V.C.(Red)
From P.E.C.Anode to "C plus 1 OUT" in Voltage Amplifier

WS.23. 2-Wires 3/036 (1 Red, 1 Black)
A.C.From Fuse Unit to Switch Box Unit (Non-Sync. Isolating Switch).

WS.24. 1-Wire 7/036 Black.
Earth from Fuse Unit to Non-Sync Case.

WS.25. 4-Wires 3/036 (2 Red, 2 Black)
1 Red from "Stage" terminal in Power Amplifier to Stage Speakers.
1 Red from "Mon" terminal in Power Amplifier to Switch Box (Mon. Switch).
2 Black from "E" terminal in Power Amplifier 1 to Stage Speakers and 1 to Mon Speaker.

WS.26. 2-Wires 3/036 (1 Red, 1 Black)
From Fuse Unit to "Mains" terminals in Changeover Switch Unit "1" (M/C1 Motor A.C).

WS.27. 1-Wire 7/036 (Black)
Earth from Power Amplifier Bus-Bar to Changeover Switch Unit "1" terminal "E" (M/C1 Pedestal Earth).

WS.28. Monitor Speaker type 92.

WS.29. 1-Wire 14/0076 P.V.C. Insulated, Screened P.V.C.Sheathed.
From Non-Sync. to "Disc" in Voltage Amplifier. Screen from Non-Sync. Earthy to "Disc E" in Voltage Amplifier.

WS.30. Microphone and/or Spare if Required.

WS.31. Voltage Amplifier Unit Assembly type 384

WS.32. Power Amplifier Unit Assembly

WS.33. 4-Wires 3/036 (3 Red, 1 Black)
1 Black from No.3. in Changeover Switch Unit "1" to No.3. in Changeover Switch Unit "2"
1 Red from No.2. on Changeover Switch in Changeover Switch Unit "1" to No.2. on Changeover Switch in Changeover Switch Unit "2".
1 Red from No.1. on Changeover Switch in Changeover Switch Unit "1" to No.1 on Changeover Switch in Changeover Switch Unit "2".
1 Red from "A1 and B2" on Changeover Switch in Changeover Switch Unit "1" to No.5. in Changeover Switch Unit "2".

WS.34. 3-Wires 16/012 P.V.C. (1 Green, 1 Yellow, 1 Blue)
Changeover Intermediates M/C1 to M/C2 (When required).

WS.35. 1-Co-Axial type 129 from P.E.C.Cathode M/C1 to "C1" in Voltage Amplifier. (Connect Screen to "E").

WS.36. 1-Wire 16/012 P.V.C. (Red)
From P.E.C.Anode M/C1 to "C plus 1 OUT" in Voltage Amplifier.

WS.37. 3-Wires 3/036 (Red).
1 Red from "VA plus" terminal in Power Amplifier to "VA plus" in Voltage Amplifier.
1 Pair Red from "6.3v" terminals in Power Amplifier to "6.3v" terminals in Voltage Amplifier.

WS.38. 1-Wire 16/012 P.V.C.(Red)
From P.E.C. Anode M/C2 to "C plus 2 OUT" in Voltage Amplifier.

WS.39. 1-Co-Axial type 129 from P.E.C.,Cathode M/C2 to "C2" in Voltage Amplifier (Connect Screen to "E")

WS.40. Double Pole Tumbler Switch (Amplifier Switch).

WS.41. 1-Co-Axial type 129 from P.E.C. Cathode M/C2 to C2. on Voltage Amplifier (Connect Screen to "E" except as in Note 2).

WS.42. 1-Wire 14/0076 P.V.C.Insulated, Screened, P.V.C.Sheathed from Non-Sync. to "Disc" on Voltage Amplifier Screen from Non-Sync. Earthy to Disc "E" on Voltage Amplifier.

WS.43. 1-Wire 16/012 P.V.C. (Red)
From P.E.C.Anode to "C plus 2 OUT" in Voltage Amplifier

WS.44. 2-Wires 3/036 (1 Red, 1 Black)
1 Red from Monitor Speaker to Switch Box (Mon.Switch)
1 Black from Switch Box (Mon.Switch) to Mon.Speaker.

WS.45. 3-Wires 16/012 P.V.C. (1 Green, 1 Yellow, 1 Blue).
Changeover Intermediates M/C1 to M/C2 (when required).

WS.46. 2-Wires 3/036 (1 Red, 1 Black).
From Fuse Unit to "Mains" terminals in Changeover Switch Unit "2" (M/C2 Motor A.C).

WS.47. 1-Wire 7/036 (Black)
Earth from Power Amplifier to Changeover Switch Unit "2" terminal "E" (M/C2 Pedestal Earth).

WS.48. 1-Wire 3/036 (Red).
From Fuse Unit (Line) to M/C2 Changeover Magnet Feed via Changeover Switch Unit "2" (When required).

WS.49. Remote Control Unit type 412.

WS.50. Changeover Switch Unit type 440.

WS.51. 1-Wire 14/0076 P.V.C.Insulated, Screened, P.V.C. Sheathed.
From Non-Sync. to "Disc" on Voltage Amplifier.
Screen from Non-Sync. Earthy to "Disc E" on Voltage Amplifier.

WS.52. 4-Wires 7/036 (2 Red, 2 Black).
1 Red from "Ex.Lamp Pos" in Power Amplifier. to A2 and B1 on Changeover Switch in Changeover Switch Unit "2".
1 Black from "Ex. Lamp Neg" in Power Amplifier to No.3. in Changeover Switch Unit "2".
1 Red from "Ex. Lamp Preheat 2" in Power Amplifier to A1 and B2 on Changeover Switch in Changeover Switch Unit "2".
1 Black from "Ex.Lamp Preheat "1" in Power Amplifier to No.4. in Changeover Switch Unit "2".

WS.53. 4-Wires 3/036 (3 Red, 1 Black).
1 Red from No.1 on Changeover Switch in Changeover Switch Unit "1" to No.1 on Changeover Switch in Changeover Switch Unit "2".
1 Red from A1 and B2 on Changeover Switch in Changeover Switch Unit "1" to No.5. in Changeover Switch unit "2".
1 Red from No.2. on Changeover Switch in Changeover Switch Unit "1" to No.2. on Changeover Switch in Changeover Switch Unit "2".
1 Black from No.3. in Changeover Switch Unit "1" to No.3. in Changeover Switch Unit "2".

WS.54. 2-Wires 3/036 (1 Red, 1 Black).
A.C.From Fuse Unit to switch Box Unit (Non.Sync. Isolating Switch).

WS.55. 1-Wire 7/036 (Black).
Earth from Fuse Unit to Non-Sync. Case.

WS.56. 1-4/Core 16/012 P.V.C.(Black, White, Blue, Red).
Black from No.4. in Changeover Switch Unit "2" to Exc. Lamp Neg. M/C2.
White from No.5. in Changeover Switch Unit "2" to Exc. Lamp Pos. M/C2.
Blue and Red from Mains terminals in Changeover Switch Unit "2" to Motor Switch (via. Pyrene Cut-out if fitted).

DV.5153 - CONTINUED

WS.57. 1-Wire 7/036 (Black).
Earth from "E" terminal in Changeover Switch Unit "1" to Pedestal M/C2.

WS.58. 3-Wires 16/012 P.V.C. (1 Green, 1 Yellow, 1 Blue)
Changeover Intermediates M/C1 to M/C2 (When required).

WS.59. 1-Wire 3/036 (Red)
From Fuse Unit (Line) to M/C2
Changeover Magnet Feed.

WS.60. Mon. Switch. Double Pole Tumbler Switch (Bridge both poles and connect so as to short monitor speaker in the "Off" position).
(Adjacent to House Telephone, if required).

WS.61. Double Pole Tumbler Switch in Conduit Box (Non.Sync. Isolating switch adjacent to Non-Sync.

DV.5153 - NOTES

1. If the exciter lamp is earthed in the soundhead, remove the link between "Ex. Lamp Preheat 1" terminal and earth Bus-Bar in the Power Amplifier Cabinet.

2. Connect screen of cell co-axial lead to earth terminal in Soundhead, only if there is no connection between this earth terminal and main Projector earth, as for example in B.A.F. Soundheads type 83 and 378. Otherwise only earth the screen at the amplifier end.

WIRE FUSE BOARD AS FOLLOWS:-

1. Amplifier
2. Projector No.1.
3. Projector No.2.
4. Non-Sync.
5. Field Rectifier (if required).
6. Changeover Magnet Feed (if required use fuse on phase side only remaining fuse spare).

ALL FUSES WIRED 15 AMPERES.

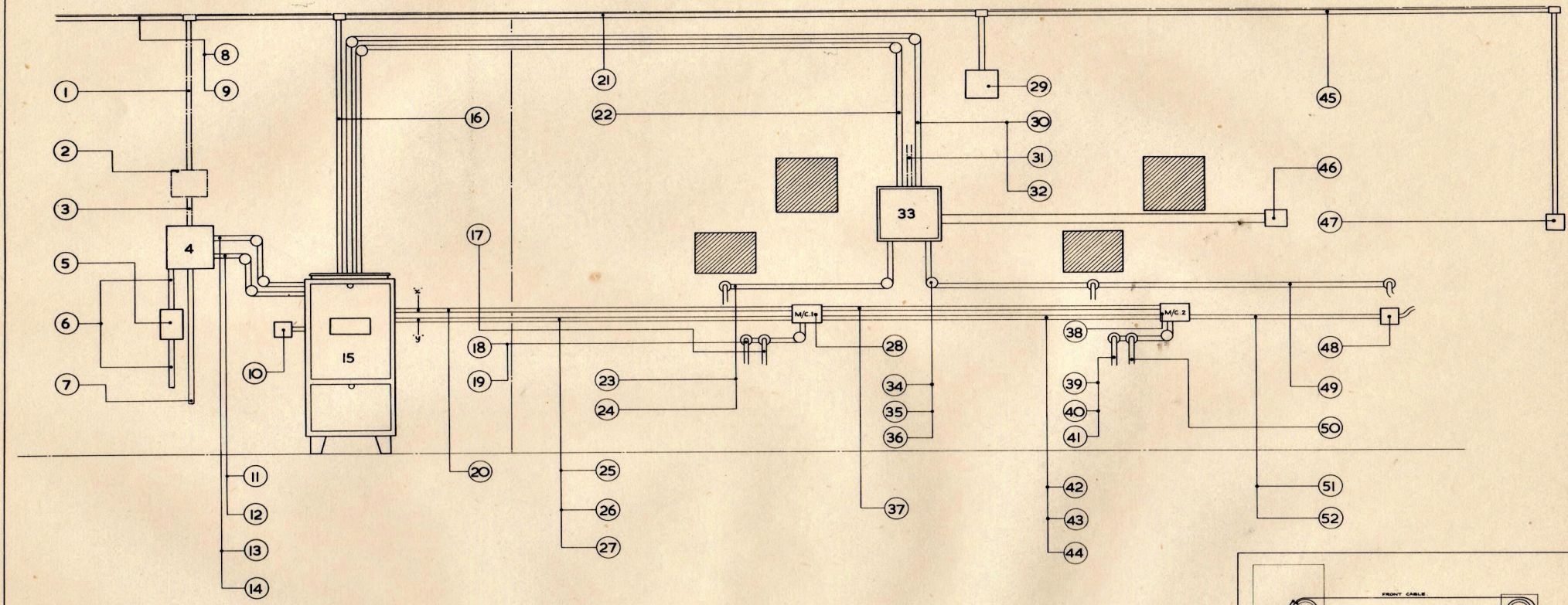

POWER AMP. UNIT ASSY. 95-130 v. 40-100 c/s TYPE 413
POWER AMP. UNIT ASSY. 190-260 v. 40-100 c/s TYPE 414

SEE ACCOMPANYING NOTES.

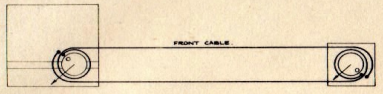

DIAGRAM SHOWING LACING OF BOWDEN WIRES FOR REMOTE CONTROL.
(V.A. FADER POINTER AT ZERO).

BRITISH ACOUSTIC FILMS LTD.

TYPICAL LAYOUT OF PROJECTION ENCLOSURE (20 w SINGLE CHANNEL).

PART NUMBER DV-5156

MODIFICATIONS

LAYOUT OF PROJECTION ENCLOSURE (20w. SINGLE)

WS.1. 2-Wires 3/036 (1 Red, 1 Black).
From Field Meter Switch Unit to Field Rectifier (When required).

WS.2. Field Meter Switch Unit type 451 (When required).

WS.3. 2-Wires 3/036 (1 Red, 1 Black)
From Fuse Unit to Field Meter Switch Unit (When required).

WS.4. 6-Way Fuse Board

WS.5. 30 Amperes Switch Fuse Unit.

WS.6. 2-Wires 7/036 (1 Red, 1 Black)
A.C. Supply from Intake.

WS.7. 1-Wire 7/036 (Black)
Main Earth Cable to rising water main or buried Earth.

WS.8. 2-Wires 3/036 (1 Red, 1 Black)
1 Red from "Stage" terminal in Power Amplifier to Stage Speakers.
1 Black from "E" terminal in Power Amplifier to Stage Speakers.

WS.9. 2-Wires 3 /036 (1 Red, 1 Black)
From Field Meter Switch Unit to Field Rectifier (When required).

WS.10. Double Pole Tumbler Switch (Amplifier Switch)

WS.11. 2-Wires 3/036 (1 Red, 1 Black).
A.C. From fuse unit to Switch Box (Amplifier Switch)

WS.12. 1-Wire 7/036 (Black)
Earth from Fuse Unit to Earth Bus-Bar in Power Amplifier.

WS.13. 6-Wires 3/036 (3 Red, 3 Black)
A.C. From Fuse Unit.
1 Pair (A.C. M/C1 Motor) to Mains terminals in Changeover Switch Unit 1.
1 Pair (A.C. M/C2 Motor) to Mains terminals in Changeover Switch Unit 2.
1 Pair (A.C. Non-Sync.) to Switch Box (Non-Sync. Isolating Switch).

WS.14. 1-Wire 7/036 (Red)
From Fuse Unit (Line) to terminal No.5. in Changeover Switch Unit 2 M/C2. Changeover Magnet Feed.

WS.15. Power Amplifier Unit Assembly

WS.16. 4-Wires 3/036 (2 Red, 2 Black).
1 Red from "Stage" terminal in Power Amplifier to Stage Speakers.
1 Red from "Mon" terminal in Power Amplifier to Mon. Speaker.
2 Black from "E" terminal in Power Amplifier 1 to Stage Speakers and 1 to Mon.Speaker.

WS.17. 1-4/Core 16/012 P.V.C. (Black, White, Blue, Red).
Black from No.4. in Changeover Switch Unit 1 to Ex. Lamp Neg. M/C1.
White from No.5. in Changeover Switch Unit 1 to Ex. Lamp Pos. M/C1.
Blue and Red from Mains terminals in Changeover Switch Unit 1 to Motor Switch (via Pyrene Cut-out if fitted) M/C1.

WS.18. 1-Wire 7/036 (Black)
Earth from "E" terminal in Changeover Switch Unit 1. to Pedestal M/C1.

WS.19. 3-Wires 16/012 P.V.C. (1 Green, 1 Yellow, 1 Blue).
Changeover Intermediates M/C1 to M/C2 (When required).

WS.20. 4-Wires 7/036 (2 Red, 2 Black)
1 Red from "Ex. Lamp Pos" terminal in Power Amplifier to A2 and B1 on Changeover Switch in Changeover Switch Unit 1.
1 Black from "Ex. Lamp Neg" terminal in Power Amplifier to No.3. terminal in Changeover Switch Unit 1.
1 Red from "Ex.Lamp Preheat 2" terminal in Power Amplifier to A1 and B2 on Changeover Switch in Changeover Switch Unit 1.
1 Black from "Ex. Lamp Preheat 1" terminal in Power Amplifier to No.4. terminal in Changeover Switch Unit 1.

WS.21. 2-Wires 3/036 (1 Red, 1 Black)
1 Red from "Mon" terminal in Power Amplifier to Mon.Speaker.
1 Black from "E" terminal in Power Amplifier to Mon Speaker.

WS.22. 3-Wires 3/036 (Red)
1 Red from "VA plus" terminal in Voltage Amplifier to "VA plus" terminal in Power Amplifier.
1 Pair Red from "6.3v" terminals in Power Amplifier to "6.3v" terminals in Voltage Amplifier.

WS.23. 1-Co-Axial type 129 from P.E.C. Cathode M/C1 to C1 on Voltage Amplifier (Connect Screen to "E" except as in Note 2).

WS.24. 1-Wire 16/012 P.V.C. (Red)
From P.E.C. Anode to "C plus 1 OUT" in Voltage Amplifier.

WS.25. 6-Wires 3/036 (3 Red, 3 Black).
1 Pair (A.C. M/C1 Motor) to Mains terminals in Changeover Switch Unit 1.
1 Pair (A.C. M/C2 Motor) to Mains terminals in Changeover Switch Unit 2.
1 Pair (A.C. Non-Sync.) to switch Box (Non-Sync. Isolating Switch).

WS.26. 1-Wire 7/036 (Black)
Earth from Power Amplifier earth Bus-Bar to "E" terminals in Changeover Switch Units 1 and 2 and Non-Sync. Case.
Loop from 1 to 2 and 2 to Non-Sync Case.

WS.27. 1-Wire 7/036 (Red)
From Fuse Unit (Line) to terminal No.5. in Changeover Switch Unit 2. M/C2 Changeover Magnet Feed.

WS.28. Changeover Switch Unit Type 440

WS.29. Monitor Speaker Type 92.

WS.30. 2-Wires 3/036 (Red)
1 From "C plus 1 IN" terminal in Voltage Amplifier to "C plus 2 IN" terminal in Voltage Amplifier to "C plus 2" terminal in Power Amplifier.

WS.31. Microphone and/or Spare (if required)

WS.32. 1-Wire 14/0076 P.V.C. insulated, screened P.V.C. Sheathed.
From "SP plus" terminal in Voltage Amplifier to "SP plus" terminal in Power Amplifier.
Connect Screen to "SP minus" in voltage Amplifier and Power Amplifier.

WS.33. Voltage Amplifier Unit Assembly Type 384.

WS.34. 1-Wire 14/0076 P.V.C. Insulated, Screened, P.V.C. Sheathed from Non-Sync to"Disc" terminal in Voltage Amplifier.
Screen from Non-Sync Earthy to "Disc" "E" terminal in Voltage Amplifier.

WS.35. 1-Co-Axial type 129 from P.E.C. Cathode M/C2 to "C.2" terminal in Voltage Amplifier. (Connect Screen to "E" except as in Note 2).

WS.36. 1-Wire 16/012 P.V.C. (Red)
From P.E.C. Anode M/C2 to "C plus 2 OUT" in Voltage Amplifier.

WS.37. 4-Wires 3/036 (3 Red, 1 Black).
1 Red from No.1 on Changeover Switch in Changeover Switch Unit "1" to No.1 on Changeover Switch in Changeover Switch Unit "2".
1 Red from No.2. on Changeover Switch in Changeover Switch Unit "2" to No.2. on Changeover Switch in Changeover Switch Unit "2"
1 Red from No.5. terminal in Changeover Switch Unit "1" to A1 and B2 on Changeover Switch in Changeover Switch Unit "2".
1 Black from No.3. terminal in Changeover Switch Unit "1" to No.3. terminal in Changeover Switch Unit "2".

WS.38. Changeover Switch Unit type 440.

WS.39. 1-Wire 7/036 (Black)
Earth from "E" terminal in Changeover Switch Unit "2" to Pedestal M/C2.

WS.40. 3-Wires 16/012 P.V.C. (1 Green, 1 Yellow, 1 Blue).
Changeover Intermediates M/C1 to M/C2 (When required).

WS.41. 1-Wire 3/036 (Red)
From No.5. terminal in Changeover Switch Unit "2" M/C2 Changeover Magnet Feed (when required).

WS.42. 4-Wires 3/036 (2 Red, 2 Black)
A.C. From Fuse Unit.
1 Pair (A.C. M/C2 Motor) to Mains terminals in Changeover Switch Unit "2".
1 Pair (A.C. Non-Sync) to Switch Box (Non.Sync. Isolating Switch).

WS.43. 1-Wire 7/036 (Black)
Earth Looped from "E" terminal in Changeover Switch Unit "1" to "E" terminal in Changeover Switch Unit "2".

WS.44. 1-Wire 3/036 (Red)
From Fuse Unit (Line) to No.5. terminal in Changeover Switch Unit "2" M/C2 Changeover Magnet Feed (when required).

WS.45. 2-Wires 3/036 (1 Red, 1 Black).
Red from Mon-Speaker to Switch Box (Mon.Switch).
Black from Switch Box (Mon.Switch) to Mon.Speaker.

WS.46. Remote Control Unit type 412.

WS.47. Monitor Switch, Double Pole Tumbler Switch (Bridge both poles and connect so as to short Mon. Speaker in "Off" position. (Adjacent to House Telephone, if required).

WS.48. Double Pole Tumbler Switch in Conduit Box. (Non-Sync. Isolating Switch) adjacent to Non-Sync.

WS.49. 1-Wire 14/0076 P.V.C. Insulated Screened, P.V.C. Sheathed from Non-Sync to "Disc" terminal in Voltage Amplifier.
Screen from Non-Sync. Earthy to "Disc E" terminal in Voltage Amplifier.

WS.50. 1-4/Core 16/012 P.V.C. (Black, White, Blue, Red)
Black from No.4. in Changeover Switch Unit "2" to Ex. Lamp Neg M/C2.
White from A2 and B1 on Changeover Switch in Changeover Switch Unit 2 to Ex. Lamp Pos. M/C2.
Blue and Red from Mains terminals in Changeover Switch Unit 2 to Motor Switch (via Pyrene Cut-out if fitted) M/C2.

WS.51. 2-Wires 3/036 (1 Red, 1 Black).
A.C. from Fuse Unit to Switch Box. (Non-Sync Isolating Switch).

WS.52. 1-Wire 7/036 (Black)
Earth Looped from "E" terminal in Changeover Switch Unit "2" to Non-Sync Case.

DV.5156 - NOTES

1. If the exciter lamp is earthed in the Soundhead, remove the link between "Ex. Lamp Preheat 1" terminal and earth Bus-Bar in the Power Amplifier Cabinet.

2. Connect screen of cell co-axial lead to Earth terminal in Soundhead, only if there is no connection between this earth terminal and main Projector earth, as for example in B.A.F. Soundheads type 83 and 378. Otherwise only earth the screen of the amplifier end.

3. Where it is necessary for the Power Amplifier to be placed in such a position that conduits "x" and "y" are required to enter changeover Switch Unit 2 instead of 1, the position of these two units must be reversed so that Changeover Switch Unit 2 is adjacent to M/Cl. i.e. the sequence of wiring must always be - Power Amplifier to Changeover Switch Unit 1 and Changeover Switch Unit 1 to Changeover Switch Unit 2.

WIRE FUSE BOARD AS FOLLOWS:-

1. Amplifier.
2. Projector No.1.
3. Projector No.2.
4. Non-Sync.
5. Field Rectifier (if required)
6. Changeover Magnet Feed (if required, use Fuse side only remaining fuse spare)

ALL FUSES WIRED 15 AMPERES.

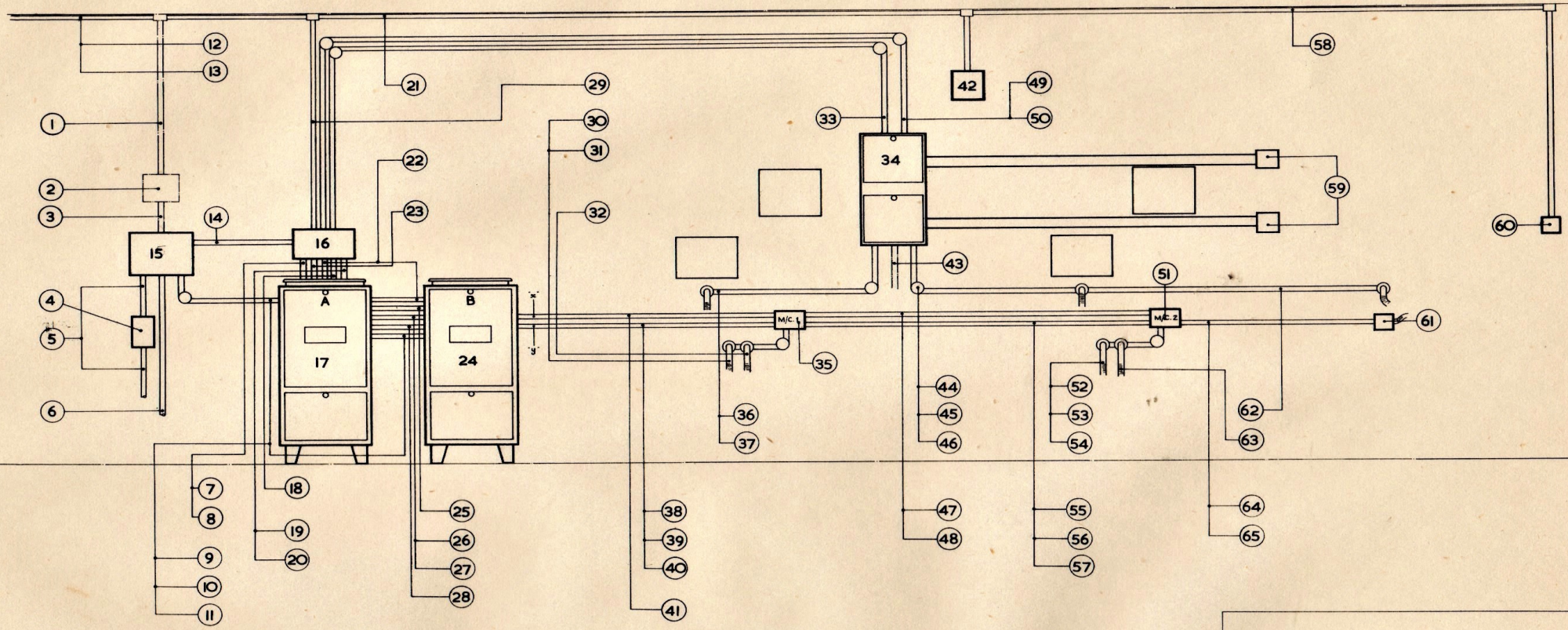

POWER AMP. UNIT ASSY. 95-130v. 40-100c/s TYPE 413
POWER AMP. UNIT ASSY. 190-260v. 40-100c/s TYPE 414

SEE ACCOMPANYING NOTES.

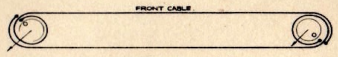

DIAGRAM SHOWING LACING OF BOWDEN WIRES FOR REMOTE CONTROLS.
(V.A. FADER POINTERS AT ZERO)

BRITISH ACOUSTIC FILMS LTD.

TYPICAL LAYOUT OF PROJECTION ENCLOSURE. (20W. DUAL CHANNEL)

DV 5162

MODIFICATIONS

DV.5162

LAYOUT OF PROJECTION ENCLOSURE (20w. DUAL)

WS.1. 2-Wires 3/036 (1 Red, 1 Black)
From Field Meter Switch Unit to Field Rectifier.
(When required).

WS.2. Field Meter Switch Unit type 451 (When required).

WS.3. 2-Wires 3/036 (1 Red, 1 Black).
From Fuse Unit to Field Meter Switch Unit.
(When required).

WS.4. 30 Amperes Switch Fuse Unit.

WS.5. 2-Wires 7/036 (1 Red, 1 Black).
A.C. Supply from Intake.

WS.6. 1-Wire 7/036 (Black)
Main Earth Cable to Rising water main or buried Earth.

WS.7. 4-Wires 3/036 (Red)
1 from "Exc. Preheat 2" terminal in Power Amplifier "A" to A1 terminal on Changeover Switch in Control Unit.
1 from "Exc. Preheat 2" terminal in Power Amplifier "B" to A2 terminal on Changeover Switch in Control Unit.
1 from "Exc. Pos" terminal in Power Amplifier "A" to B1 terminal on Changeover Switch in Control Unit.
1 from "Exc. Pos" terminal in Power Amplifier "B" to B2 terminal on Changeover Switch in Control Unit

WS.8. 2-Wires 7/036 (Red)
1 from No.1. terminal on Changeover Switch in Control Unit to A1 and B2 on Changeover Switch in Changeover Switch Unit 1.
1 from No.2. terminal on Changeover Switch in Control Unit to A2 and B1 on Changeover Switch in Changeover Switch Unit 1.

WS.9. 6-Wires 3/036 (3 Red, 3 Black).
A.C. from Fuse Unit.
1 Pair (A.C. M/C1 Motor) to Mains terminals in changeover Switch Unit 1.
1 Pair (A.C. M/C2 Motor) to Mains terminals in changeover Switch Unit 2.
1 Pair (A.C. Non-Sync) to Switch Box (Non-Sync Isolating Switch).

WS.10. 1-Wire 7/036 (Black)
Earth from Fuse Unit. Looped from Bus-Bar in Power Amplifier "A" to Power Amplifier "B".

WS.11. 1-Wire 7/036 (Red)
From Fuse Unit (Line) to terminal No.5. in Changeover Switch Unit 2. M/C2 Changeover Magnet Feed.

WS.12. 2-Wires 3/036 (Red)
From "Stage" terminals in Control Unit to Stage Speakers.

WS.13. 2-Wires 3/036 (1 Red, 1 Black).
From Field Meter Switch Unit to Field Rectifier.
(When required).

WS.14. 4-Wires 3/036 (2 Red, 2 Black).
1 Red and 1 Black A.C. from Fuse Unit to "Mains in B" terminals in Control Unit.
1 Red and 1 Black A.C. from Fuse Unit to "Mains in A" terminals in Control Unit.

WS.15. 8-way Fuse Board.

WS.16. Control Unit type 478.

WS.17. Power Amplifier Unit Assembly "A".

WS.18. 6-Wires 3/036 (5 Red, 1 Black).
1 Black from "Comm" terminal in Power Amplifier "A" to No.4. terminal on Changeover Switch in Control Unit.
1 Pair Red from "6.3v" terminals in Power Amplifier "A" to "6.3v" terminals in Voltage Amplifier Case Section "A".
1 Red from "VA plus" terminal in Power Amplifier "A" to "V.A. plus" terminal in Voltage Amplifier Case Section "A"
1 Red from "Stage" terminal in Power Amplifier "A" to D2. terminal on Changeover Switch in Control Unit.
1 Red from "Mon" terminal in Power Amplifier "A" to C2 terminal on Changeover Switch in Control Unit.

WS.19. 4-Wires 3/036 (Red)
1 from "C plus 1" terminal in Power Amplifier "A" to "C plus 1 IN" terminal in Voltage Amplifier Case Section "A".
1 from "C plus 1" terminal in Power Amplifier "B" to "C plus 1 IN" terminal in Voltage Amplifier Case Section "B"
1 from "C plus 2" terminal in Power Amplifier "A" to "C plus 2 IN" terminal in Voltage Amplifier Case Section "A".
1 from "C plus 2" terminal in Power Amplifier "B" to "C plus 2 IN" terminal in Voltage Amplifier Case Section "B".

WS.20. 2-Wires 14/0076 P.V.C. Insulated, Screened, P.V.C. Sheathed.
1 from "SP plus" terminal in Power Amplifier "A" to "SP plus" terminal in Voltage Amplifier Case Section "A"
1 from "SP plus" terminal in Power Amplifier "B" to "SP plus" terminal in Voltage Amplifier Case Section "B" (Connect Screens to "SP minus" terminal at both ends).

WS.21. 2-Wires 3/036 (Red)
From "Mon" terminals in Control Unit to Mon.Speaker.

WS.22. 6-Wires 3/036 (5 Red, 1 Black)
1 Black from "Com" terminal in Power Amplifier "B" to No.3. terminal on Changeover Switch in Control Unit.
1 Pair Red from "6.3v" terminals in Power Amplifier "B" to "6.3v" terminals in Voltage Amplifier Case Section "B"
1 Red from "VA plus" terminal in Power Amplifier "B" to "VA plus" terminal in Voltage Amplifier Case Section "B".
1 Red from "Stage" terminal in Power Amplifier "B" to D.1 terminal on Changeover Switch in Control Unit.
1 Red from "Mon" terminal in Power Amplifier "B" to C1 terminal on Changeover Switch in Control Unit.

WS.23. 4-Wires 3/036 (2 Red, 2 Black).
1 Red and 1 Black from "Mains out A" terminal in Control Unit to "Mains" terminals in Power Amplifier "A".
1 Red and 1 Black from "Mains Out B" terminals in Control Unit to "Mains" terminals in Power Amplifier "B"

WS.24. Power Amplifier Unit Assembly "B".

WS.25. 4-Wires 3/036 (3 Red, 1 Black)
1 Black and 1 Red from "Mains Out B" terminals in Control Unit to "Mains" terminals in Power Amplifier "B".
1 Red from "Ex. Lamp Pos" terminal in Power Amplifier "B" to B2. terminal on Changeover Switch in Control Unit.
1 Red from "Ex.Lamp Preheat 2" terminal in Power Amplifier "B" to A2 terminal on Changeover Switch in Control Unit.

WS.26. 2-Wires 3/036 (Red)
1 from "C plus 1" terminal in Power Amplifier "B" to "C plus 1 IN" terminal in Voltage Amplifier Case Section "B"
1 from "C plus 2" terminal in Power Amplifier "B" to "C plus 2 IN" terminal in Voltage Amplifier Case Section "B".

WS.27. 1-Wire 14/0076 P.V.C. Insulated Screened P.V.C. Sheathed from "SP plus" terminal in Power Amplifier "B" to "SP plus" terminal in Voltage Amplifier Section "B". (Connect Screen to "SP minus" terminal at both ends).

WS.28. 4-Wires 7/036 (2 Red, 2 Black).
1 Red from No.2. on Changeover Switch in Control Unit to A2 and B1 on Changeover Switch in Changeover Switch Unit 1.
1 Black from "Ex.Lamp Neg" terminal in Power Amplifier "A" to "Ex.Lamp Neg" terminal in Power Amplifier "B".
1 Red from No.1 on Changeover Switch in Control Unit to A1 and B2 on Changeover Switch in Changeover Switch Unit 1.
1 Black from "Ex.Lamp Preheat"1" terminal in Power Amplifier "A" to "Ex.Lamp Preheat 1" terminal in Power Amplifier "B".

WS.29. 4-Wires 3/036 (Red)
1 Pair from "Stage" terminals in Control Unit to Stage Speakers.
1 Pair from "Mon" terminals in Control Unit to Mon.Speaker. (Phasing not important).

WS.30. 1-Wire 7/036 (Black)
Earth from "E" terminal in Changeover Switch Unit 1 to Pedestal M/C1.

WS.31. 3-Wires 16/012 P.V.C.(1 Green, 1 Yellow, 1 Blue)
Changeover Intermediates M/C1 to M/C2 (When required.)

WS.32. 1-4/Core 16/012 P.V.C. (Black, White, Blue, Red).
Black from No.4. in Changeover Switch Unit 1 to Ex. Lamp Neg. M/C1.
White from No.5. in Changeover Switch Unit 1 to Ex. Lamp Pos. M/C1.
Blue and Red from Mains terminals in Changeover Switch Unit 1. to Motor Switch (via Pyrene cutout if fitted) M/C1.

WS.33. 6-Wires 3/036 (Red)
1 Pair from "6.3v" terminals in Power Amplifier "A" to "6.3v" terminals in Voltage Amplifier Case Section "A"
1 Pair from "6.3v" terminals in Power Amplifier "B" to "6.3v" terminals in Voltage Amplifier Case Section "B"
1 from "VA plus" terminal in Power Amplifier "A" to "VA plus" terminal in Voltage Amplifier Case Section "A".
1 from "VA plus" terminal in Power Amplifier "B" to "VA plus" terminal in Voltage Amplifier Case Section "B".

WS.34. Duplicate Voltage Amplifier Unit Assembly type 477

WS.35. Changeover Switch Unit type 440.

WS.36. 1-Co-Axial type 129 from P.E.C. Cathode M/C1 to C1 in Voltage Amplifier Case (connect Screen to "E" except as in Note 4).

WS.37. 1-Wire 16/012 P.V.C.(Red) from P.E.C.Anode to "C plus 1 OUT" in Voltage Amplifier.

WS.38. 6-Wires 3/036 (3 Red, 3 Black)
1 Pair (A.C.M/C1 Motor) to Mains terminals in Changeover Switch Unit 1.
1 Pair (A.C.M/C2 Motor) to Mains terminals in Changeover Switch Unit 2.
1 Pair (A.C.Non-Sync) to Switch Box (Non-Sync Isolating Switch).

WS.39. 1-Wire 7/036 (Black)
Earth from Power Amplifier "B";earth Bus-bar to "E" terminals in Changeover Switch Units 1 and 2 and Non-Sync.Case. Loop from 1 to 2 and 2 to Non-Sync Case.

WS.40. 1-Wire 7/036 (Red)
From Fuse Unit (Line) to terminal No.5. in Changeover Switch Unit 2 M/C2 Changeover Magnet Feed.

WS.41. 4-Wires 7/036 (2 Red, 2 Black)
1 Red from No.2. on Changeover Switch in Control Unit to A2 and B1 on Changeover Switch in Changeover Switch Unit 1.
1 Black from "Ex.Lamp Neg" in Power Amplifier "B" to No.3. terminal in Changeover Switch Unit 1.
1 Red from No.1 on Changeover Switch in Control Unit to A1 and B2 on Changeover Switch in Changeover Switch Unit 1.
1 Black from "Ex.Lamp Preheat 1" terminal in Power Amplifier "B" to No.4. terminal in Changeover Switch Unit 1.

WS.42. Monitor Speaker type 92.

WS.43. Microphone and/or Spare (if required).

WS.44. 1-Wire 14/0076. P.V.C. Insulated Screened P.V.C. Sheathed.
From Non-Sync. to Disc terminal in Voltage Amplifier Case.
Screen from Non-Sync. Earthy to "Disc. E" terminal in Voltage Amplifier Case.

WS.45. 1-Co-Axial type 129 from P.E.C.Cathode M/C2 to "C2" terminal in Voltage Amplifier. (Connect screen to "E" except as in Note 4).

WS.46. 1-Wire 16/012 P.V.C. (Red).
From P.E. C. Anode M/C2. to "C plus 2 OUT" in Voltage Amplifier Case.

WS.47. 4-Wires 3/036 (3 Red, 1 Black).
1 Red from No.1 on Changeover Switch in Changeover Switch Unit "1" to No.1 on Changeover Switch in Changeover Switch Unit "2".
1 Red from No.2. on Changeover Switch in Changeover Switch Unit "2" to No.2. on Changeover Switch in Changeover Switch Unit "2"
1 Red from No.5. terminal in Changeover Switch Unit "1" to A1 and B2 on Changeover Switch in Changeover Switch Unit "2".
1 Black from No.3. terminal in Changeover Switch Unit "1" to No.3. terminal in Changeover Switch "2".

WS.48. 3-Wires 16/012 P.V.C. (1 Green, 1 Yellow, 1 Blue).
Changeover Intermediates M/C1 to M/C2 (When required).

WS.49. 4-Wires 3/036 (Red)
1 from "C plus 1" terminal in Power Amplifier "A" to "C plus 1 IN" terminal in Voltage Amplifier Case Section "A".
1 from "C plus 2" terminal in Power Amplifier "A" to "C plus 2 IN" terminal in Voltage Amplifier Case Section "A".
1 from "C plus 1" terminal in Power Amplifier "B" to "C plus 1" terminal in Voltage Amplifier Case Section "B".
1 from "Cplus 2" terminal in Power Amplifier "B" to "C plus 2 IN" terminal in Voltage Amplifier Case Section "B".

WS.50. 2-Wires 14/0076 P.V.C.Insulated, Screened P.V.C. Sheathed.
1 from "SP plus" terminal in Power Amplifier "A" to "SP plus" terminal in Voltage Amplifier Case Section "A".
From "SP plus" terminal in Power Amplifier "B" to "SP plus" terminal in Voltage Amplifier Case Section "B". Connect Screens to "SP minus" in Power Amplifier and Voltage Amplifier Case Sections.

WS.51. Changeover Switch Unit type 440.

WS.52. 1-Wire 7/036 (Black)
Earth from "E" terminal in Changeover Switch Unit "2" to Pedestal M/C2.

WS.53. 3-Wires 16/012 P.V.C. (1 Green, 1 Yellow, 1 Blue).
Changeover Intermediates M/C1 to M/C2 (When required).

WS.54. 1-Wire 3/036 (Red)
From No.5. terminal in Changeover Switch Unit "2".
M/C2 Changeover Magnet Feed (When required).

WS.55. 4-Wires 3/036 (2 Red, 2 Black) A.C.From Fuse Unit.
1 Pair (A.C. M/C2 Motor) to Mains terminals in Changeover Switch Unit "2".
1 pair (A.C.Non-Sync) to switch Box (Non-Sync. Isolating Switch).

WS.56. 1-Wire 7/036 (Black)
Earth Looped from "E" terminal in Changeover Switch Unit "1" to "E" terminal in Changeover Switch Unit "2".

WS.57. 1-Wire 3/036 (Red)
From Fuse Unit (Line) to No.5. terminal in Changeover Switch Unit "2". M/C2 Changeover Magnet Feed (When required).

WS.58. 2-Wires 3/036 (Red)
1 From Mon Speaker to Switch Box (Mon.Switch).
1 From Switch Box (Mon Switch) to Mon.Speaker.

WS.59. Remote Control Units type 412

WS.60. Monitor Switch Double Pole Tumbler Switch (Bridge Both Poles and connect so as to short Mon. Speaker in "Off" position (Adjacent to House Telephone) if required.

WS.61. Double Pole Tumbler Switch in Conduit Box (Non.Sync Isolating Switch) adjacent to Non.Sync.

WS.62. 1-Wire 14/0076 P.V.C. Insulated, Screened, P.V.C. Sheathed. From Non-Sync to "Disc" terminal in Voltage Amplifier Case. Screen from Non-Sync. Earthy to "Disc E" terminal in Voltage Amplifier Case.

WS.63. 1-4/Core 16/012 P.V.C. (Black, White, Blue, Red).
Black from No.4. in Changeover Switch Unit "2" to Ex.Lamp Neg. M/C2.
White from A2 and B1 on Changeover Switch in Changeover Switch Unit 2 to Ex. Lamp Pos. M/C2.
Blue and Red from Mains terminals in Changeover Switch Unit 2 to Motor Switch (via. Pyrene Cut-out if fitted) M/C2.

WS.64. 2-Wires 3/036 (1 Red, 1 Black).
A.C. From Fuse Unit to Switch Box. (Non.Sync Isolating Switch).

WS.65. 1-Wire 7/036 (Black)
Earth Looped from "E" terminal in Changeover Switch Unit "2" to Non-Sync. Case.

DV.5162 - NOTES

1. Remove link between "Com" terminal and Bus-Bar in Power Amplifier "B" Cabinet on all installations.

2. Remove link between "Ex.Preheat 1" terminal and Bus-Bar in Power Amplifier "B" Cabinet on all installations.

3. If the exciter lamp is earthed in the soundhead, remove the link between "Ex.Preheat 1" terminal and Bus-Bar in Power Amplifier Cabinet, "A".

4. Connect screen of cell co-axial lead to earth terminal in Soundhead, only if there is no connection between this earth terminal and main Projector earth, as for example in B.A.F. Soundheads type 83 and 378, otherwise only earth the screen at the amplifier end.

5. Where it is necessary for the Power Amplifiers to be placed in such a position that conduits "x and y" are required to enter Changeover Switch Unit 2 instead of 1, the position of these two units must be reversed so that Changeover Switch Unit 2 is adjacent to M/C1 and Changeover Switch Unit 1 is adjacent to M/C2.
i.e. the sequence of wiring must always be - Power Amplifiers to Changeover Switch Unit 1 and Changeover Switch Unit 1 to Changeover Switch Unit 2.

6. On completion of installation the Chief Projectionist should be instructed to use each channel on alternate weeks to preserve the formation of electrolytic condensers.

7. WIRE FUSE BOARD AS FOLLOWS:-

1. Amplifier "A"
2. Amplifier "B"
3. Projector No.1.
4. Projector No.2.
5. Non-Sync
6. Field Rectifier (if required)
7. Changeover Magnet Feed (if required).
8. Spare

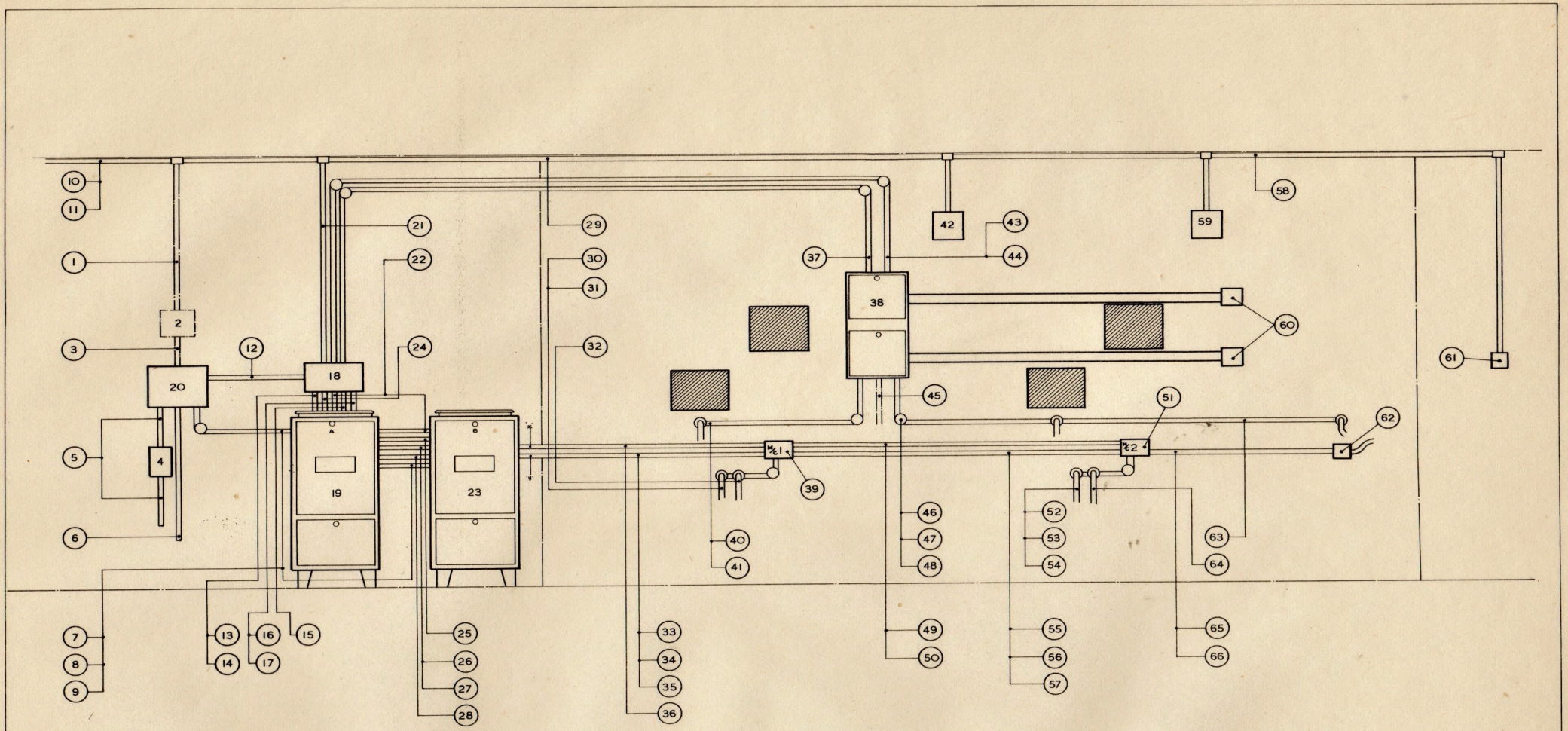

DIAGRAM SHOWING LACING OF BOWDEN WIRES FOR REMOTE CONTROLS (VIA FADER POINTERS AT ZERO)

POWER AMP. UNIT ASSEMBLY 95 - 130 v 40 - 100 c/s TYPE 413
POWER AMP. UNIT ASSEMBLY 190 - 260v 40 - 100 c/s TYPE 414

SEE ACCOMPANYING NOTES.

BRITISH ACOUSTIC FILMS LTD.

TYPICAL LAYOUT OF PROJECTION ENCLOSURE (60W DUAL CHANNEL)

DRN BY | DATE
CKD BY | APPD BY

PART No. DV 5164

MODIFICATIONS

LAYOUT OF PROJECTION ENCLOSURE (40w. DUAL)

WS.1. 2-Wires 3/036 (1 Red, 1 Black)
From Field Meter Switch Unit to Field Rectifier (When required).

WS.2. Field Meter Switch Unit type 451.
(When required).

WS.3. 2-Wires 3/036 (1 Red, 1 Black).
From Fuse Unit to Field Meter Switch Unit
(When required).

WS.4. 30 Amperes Switch Fuse Unit.

WS.5. 2-Wires 7/036 (1 Red, 1 Black) A.C.Supply from Intake.

WS.6. 1-Wire 7/036 (Black) Main Earth cable to rising water main or buried earth.

WS.7. 6-Wires 3/036 (3 Red, 3 Black).
A.C. from Fuse Unit.
1 Pair (A.C. M/C1 Motor) to Mains terminals in Changeover Switch Unit 1.
1 Pair (A.C. M/C2 Motor) to Mains terminals in Changeover Switch Unit 2.
1 Pair (A.C. Non-Sync.) to Switch Box (Non.Sync. Isolating Switch).

WS.8. 1-Wire 7/036 (Black).
Earth from Fuse Unit. Looped from Bus-Bar in Power Amplifier "A" to Power Amplifier "B"

WS.9. 1-Wire 7/036 (Red)
From fuse Unit (Line) to terminal No.5. in Changeover Switch Unit 2 M/C2 Changeover Magnet Feed.

WS.10. 2-Wires 3/036 (1 Red, 1 Black).
1 Red from "Stage" terminal in Control Unit to Stage Speakers.
1 Black from "Com" terminal in Control Unit to Stage Speakers.

WS.11. 2-Wires 3/036 (1 Red, 1 Black).
From Field Meter Switch Unit to Field Rectifier (When required).

WS.12. 4-Wires 3/036 (2 Red, 2 Black).
1 Red and 1 Black A.C. from Fuse Unit to "Mains Input B" terminals in Control Unit.
1 Red and 1 Black A.C. from Fuse Unit to "Mains Input B" terminals in Control Unit.

WS.13. 4-Wires 3/036 (Red)
1 From "EXC PREHEAT 2" terminal in Power Amplifier "A" to Exciter 2 "A" AMP" terminal in Control Unit.
1 from "EXC PREHEAT 2" terminal in Power Amplifier "B" to Exciter 2 "B" Amplifier terminal in Control Unit.
1 from "EXC.POS" terminal in Power Amplifier "A" to "Exciter plus "A" Amplifier" terminal in Control Unit.
1 from "EXC.POS" terminal in Power Amplifier "B" to "Exciter plus B" Amplifier" terminal in Control Unit.

WS.14. 2-Wires 7/036 (Red)
1 from "Ex.Lamp Preheat" terminal in Control Unit to A1 and B2 on Changeover Switch in Changeover Switch Unit 1.
1 from "Ex.Lamp Pos" terminal in Control Unit to A2 and B1 on Changeover Switch in Changeover Switch Unit 1.

WS.15. 6-Wires 3/036 (5 Red, 1 Black).
1 Black from "Comm" terminal in Power Amplifier "A" to "Comm" terminal in Control Unit.
1 Pair Red from "6.3v" terminals in Power Amplifier "A" to "6.3v" terminals in Voltage Amplifier Case Section "A".
1 Red from "VA plus" terminal in Power Amplifier "A" to "VA plus" terminal in Voltage Amplifier Case Section "A".
1 Red from "Stage" terminal in Power Amplifier "A" to "A" Amplifier Stage terminal in Control Unit.
1 Red from "MON" terminal in Power Amplifier "A" to "MON" "A" Amplifier terminal in Control Unit.

WS.16. 4-Wires 3/036 (Red)
1 from "C plus 1" terminal in Power Amplifier "A" to "C plus 1 IN" terminal in Voltage Amplifier Case Section "A".
1 From "C plus 1" terminal in Power Amplifier "B" to "C plus 1 IN" terminal in Voltage Amplifier Case Section "B"
1 from "C plus 2" terminal in Power Amplifier "A" to "C plus 2 IN" terminal in Voltage Amplifier Case Section "A"
1 from "C plus 2" terminal in Power Amplifier "B" to "C plus 2 IN" terminal in Voltage Amplifier Case Section "B"

WS.17. 2-Wires 14/0076 P.V.C. insulated screened P.V.C. Sheathed.
1 from "SP plus" terminal in Power Amplifier "A" to "Power Amplifier "A"IN"terminal in Control unit.
1 From "Sp plus" terminal in Power Amplifier "B" to "Power Amplifier "B IN" terminal in Control Unit (Connect screens to "SP minus" terminal in Power Amplifiers and to screens in Control Unit.

WS.18. Control Unit type 476

WS.19. Power Amplifier Unit Assembly "A"

WS.20. 8-Way Fuse Board.

WS.21. 6-Wires 3/036 (3 Red, 3 Black).
1 Red from"stage"terminal in Control Unit to Stage Speakers.
1 Black from "Com" terminal in Control Unit to Stage Speakers.
1 Red from "MON" "A" terminal in Control Unit to "MON" "A".
1 Black from "Com" terminal in Control Unit to "MON" "A"
1 Red from "MON" "B" terminal in Control Unit to "MON" "B".
1 Black from "Com" terminal in Control Unit to "MON" "B".

WS.22. 6-Wires 3/036 (5 Red, 1 Black).
1 Black from "Com" terminal in Power Amplifier "B" to "Com" terminal in Control Unit.
1 Pair Red from "6.3v" terminals in Power Amplifier "B" to "6.3v" terminal in Voltage Amplifier Case Section "B".
1 Red from "VA plus" terminal in Power Amplifier "B" to "VA plus" terminal in Voltage Amplifier Case Section "B".
1 Red from "Stage" terminal in Power Amplifier "B" to "B" Amplifier Stage terminal in Control unit.
1 Red from "Mon" terminal in Power Amplifier "B" to "Mon" "B" Amplifier"terminal in Control Unit.

WS.23. Power Amplifier Unit Assembly "B"

WS.24. 4-Wires 3/036 (2 Red, 2 Black).
1 Red and 1 Black from "Mains to "A" Amp" terminals in Control Unit to "Mains" terminals in Power Amplifier "A".
1 Red and 1 Black from "Mains to "B" Amp" terminals in Control Unit to "Mains" terminals in Power Amp."B".

WS.25. 4-Wires 3/036 (3 Red, 1 Black).
1 Black and 1 Red from "Mains to B Amp" terminals in Control Unit to "Mains" terminals in Power Amplifier "B".
1 Red from "Ex.Lamp Pos" terminal in Power Amplifier "B" to "Exc.plus "B"Amp" terminal in Control Unit.
1 Red from "Ex.Lamp Preheat 2" terminal in Power Amplifier "B" to"Exc. 2 "B" Amp". terminal in Control Unit.

WS.26. 2-Wires 3/036 (Red)
1 from "C plus 1" terminal in Power Amplifier "B" to "C plus 1 IN" terminal in Voltage Amplifier Case Section "B".
1 from "C plus 2" terminal in Power Amplifier "B" to "C plus 2 IN" terminal in Voltage Amplifier Case Section "B".

WS.27. 1-Wire 14/0076 P.V.C. Insulated, Screened, P.V.C.Sheathed.
From "Sp plus" terminal in Power Amplifier "B" to "Power Amp."B" IN" terminal in Control Unit.
(Connect Screen to "SP minus" terminal in Power Amplifier and to Screens in Control Unit).

WS.28. 4-Wires 7/036 (2 Red, 2 Black).
1 Red from "Ex.Lamp Pos" terminal in Control Unit to A2 and B1 on Changeover Switch in Changeover Switch Unit 1.
1 Black from "Ex.Lamp Neg" terminal in Power Amplifier "A" to "Ex.Lamp Neg" terminal in Power Amplifier "B".
1 Red from "Ex.Lamp Preheat" terminal in Control Unit to A1 and B2 on Changeover Switch in Changeover Switch Unit 1.
1 Black from "Ex.Lamp Preheat 1" terminal in Power Amplifier "A" to "Ex. Lamp Preheat 1" terminal in Power Amplifier "B"

WS.29. 4-Wires 3/036 (2 Red, 2 Black).
1 Red from "Mon A" terminal in Control Unit to Mon."A".
1 Black from "Com" terminal in Control Unit to Mon."A"
1 Red from "MON B" terminal in Control Unit to Mon."B"
1 Black from "Com" terminal in Control Unit to Mon."B"

WS.30. 1-Wire 7/036 (Black)
Earth from "E" terminal in Changeover Switch Unit 1.
to Pedestal M/Cl.

WS.31. 3-Wires 16/012 P.V.C. (1 Green, 1 Yellow, 1 Blue).
Changeover Intermediates M/Cl to M/C2 (When required).

WS.32. 1-4/Core 16/012 P.V.C.(Black, White, Blue, Red).
Black from No.4. in Changeover Switch Unit 1 to "Ex.Lamp Neg" M/Cl.
White from No.5. in Changeover Switch Unit 1 to "Ex.Lamp Pos" M/Cl.
Blue and Red from mains terminals in changeover Switch Unit 1 to Motor Switch (via Pyrene Cut-out if fitted) M/Cl.

WS.33. 6-Wires 3/036 (3 Red, 3 Black).
A.C.From Fuse Unit.
1 Pair (A.C.M/Cl Motor) to Mains terminals in Changeover Switch Unit 1.
1 Pair (A.C.M/C2.Motor) to Mains terminals in Changeover Switch Unit 2.
1 Pair (A.C.Non-Sync) to Switch Box (Non-Sync. Isolating Switch).

WS.34. 1-Wire 7/036 (Black)
Earth from Power Amplifier "B" earth Bus-Bar to "E" terminals in Changeover Switch Units 1 and 2 and Non-Sync Case.
Loop from 1 to 2 and 2 to Non-Sync Case.

WS.35. 1-Wire 7/036 (Red)
From Fuse Unit (Line) to terminal No.5.in Changeover Switch Unit 2 M/C2 Changeover Magnet Feed.

WS.36. 4-Wires 7/036 (2 Red, 2 Black).
1 Red from "Ex.Lamp Pos" terminal in Control Unit to A2 and Bl on Changeover Switch in Changeover Switch Unit 1.
1 Black from "Ex.Lamp Neg" in Power Amplifier "B" to No.3. terminal in Changeover Switch Unit 1.
1 Red from "Ex.Lamp Preheat" terminal in Control Unit to Al and B2 on Changeover Switch in Changeover Switch Unit 1.
1 Black from "Ex.Lamp Preheat 1" terminal in Power Amplifier "B" to No.4. terminal in Changeover Switch Unit 1.

WS.37. 6-Wires 3/036 (Red)
1 Pair from "6.3v" terminals in Power Amplifier "A" to "6.3v" terminals in Voltage Amplifier Case Section "A".
1 Pair from "6.3v" terminals in Power Amplifier "B" to "6.3v" terminals in Voltage Amplifier Case Section "B".
1 from "VA plus" terminal in Power Amplifier "A" to "VA plus" terminal in Voltage Amplifier Case Section "A".
1 from "VA plus" terminal in Power Amplifier "B" to "VA plus" terminal in Voltage Amplifier Case Section "B".

WS.38. Duplicate Voltage Amplifier Unit Assembly type 477.

WS.39. Changeover Switch Unit type 440

WS.40. 1-Co-Axial type 129 from P.E.C.Cathode M/Cl to Cl in Voltage Amplifier Case. (Connect Screen to "E" except as in Note 4).

WS.41. 1-Wire 16/012 P.V.C.(Red)
From P.E.C. Anode to "C plus 1 OUT" in Voltage Amplifier

WS.42. Monitor Speaker type 92 "A".

WS.43. 4-Wires 3/036 (Red)
1 from "C plus 1" terminal in Power Amplifier "A" to "C plus 1 IN" terminal in Voltage Amplifier Case Section "A".
1 from "C plus 2" terminal in Power Amplifier "A" to "C plus 2 IN" terminal in Voltage Amplifier Case Section "A"
1 from "C plus 1" terminal in Power Amplifier "B" to "C plus 1 IN" terminal in Voltage Amplifier Case Section "B"
1 from "C plus 2" terminal in Power Amplifier "B" to "C plus 2 IN" terminal in Voltage Amplifier Case Section "B".

WS.44. 2-Wires 14/0076 P.V.C.Insulated, Screened P.V.C.Sheathed
1 from "A.V.A.OUT" terminal in Control Unit to "SP plus" terminal in Voltage Amplifier Case Section "A".
1 from "B.V.A. OUT" terminal in Control Unit to "SP plus" terminal in Voltage Amplifier Case Section "B".
Connect Screens to "SP minus" in Voltage Amplifier Case and to Screens in Control Unit.

WS.45. Microphone and/or Spare (if required).

WS.46. 1-Wire 14/0076 P.V.C. Insulated, Screened, P.V.C. Sheathed
From "Non-Sync" to "Disc" terminal in Voltage Amplifier Case.
Screen from Non-Sync Earthy to "Disc E" terminal in Voltage Amplifier Case.

WS.47. 1-Co-Axial type 129 from P.E.C.Cathode M/C2 to "C2" terminal in Voltage Amplifier. (Connect screen to "E" except as in Note 4).

WS.48. 1-Wire 16/012 P.V.C. (Red).
From P.E.C. Anode M/C2 to "C plus 2 OUT" in Voltage Amplifier Case.

WS.49. 4-Wires 3/036 (3 Red, 1 Black).
1 Red from No.1. on Changeover Switch in Changeover Switch Unit "1" on Changeover Switch in Changeover Switch Unit "2".
1 Red from No.2. on Changeover Switch in Changeover Switch Unit "2" to No.2. on Changeover Switch in Changeover Switch Unit "2".
1 Red from No.5. terminal in Changeover Switch Unit "1" to A1 and B2 on Changeover Switch in Changeover Switch Unit "2".
1 Black from No.3. terminal in Changeover Switch Unit "1" to No.3. terminal in Changeover Switch Unit "2".

WS.50. 3-Wires 16/012 P.V.C. (1 Green, 1 Yellow, 1 Blue).
Changeover intermediates M/C1 to M/C2 (When required).

WS.51. Changeover Switch Unit type 440.

WS.52. 1-Wire 7/036 (Black)
Earth from "E" terminal in Changeover Switch Unit "2" to pedestal M/C2.

WS.53. 3-Wires 16/012 P.V.C. (1 Green, 1 Yellow, 1 Blue)
Changeover intermediates M/C1 to M/C2 (When required).

WS.54. 1-Wire 3/036 (Red)
From No.5. terminal in Changeover Switch Unit "2" M/C2 changeover Magnet Feed (When required).

WS.55. 4-Wires 3/036 (2 Red, 2 Black) A.C.From Fuse Unit.
1 Pair (A.C. M/C2 Motor) to Mains terminals in Changeover Switch Unit "2".
1 Pair (A.C. Non-Sync) to Switch Box (Non.Sync Isolating Switch).

WS.56. 1-Wire 7/036 (Black)
Earth Looped from "E" terminal in Changeover Switch Unit "1" to "E" terminal in Changeover Switch Unit "2".

WS.57. 1-Wire 3/036 (Red)
From Fuse Unit (Line) to No.5. terminal in Changeover Switch Unit "2" M/C2 Changeover Magnet Feed (When required).

WS.58. 4-Wires 3/036 (Red)
2 from Mon. Speaker "A" to Switch Box (Mon-Switch).
2 from Mon. Speaker "B" to Switch Box (Mon-Switch).

WS.59. Monitor Speaker type 92 "B"

WS.60. Remote Control Units type 412.

WS.61. Monitor Switch Double Pole tumbler switch.
Connect so as to short Mon. Speakers in "Off" position (adjacent to house telephone) if required.

WS.62. Double Pole tumbler switch in Conduit Box (Non.sync.Isolating Switch) adjacent to Non-Sync.

DV.5164 - CONTINUED

WS.63. 1-Wire 14/0076 P.V.C. Insulated, Screened P.V.C. Sheathed.
From Non-Sync. to "Disc" terminal in Voltage Amplifier Case.
Screen from Non-Sync. Earthy to "Disc" "E" terminal in Voltage Amplifier Case.

WS.64. 1-4/Core 16/012 P.V.C. (Black, White, Blue, Red).
Black from No.4. in Changeover Switch Unit 2 to "Ex. Lamp Neg" M/C2.
White from A2 and B1 on Changeover Switch in Changeover Switch Unit 2 to "Ex.Lamp Pos" M/C2.
Blue and Red from Mains terminals in Changeover Switch Unit 2 to Motor Switch (via. Pyrene Cut-out if fitted) M/C2.

WS.65. 2-Wires 3/036 (1 Red, 1 Black)
A.C. from Fuse Unit to Switch Box. (Non-Sync.Isolating Switch.)

WS.66. 1-Wire 7/036 (Black)
Earth looped from "E" terminal in Changeover Switch Unit "2" to Non-Sync. Case.

DV.5164 - NOTES

1. Remove link between "Com." terminal and Bus-Bar in Power Amplifier "B" Cabinet on all installations.

2. Remove link between "EX.PREHEAT 1" terminal and Bus-Bar in Power Amplifier "B" Cabinet on all installations.

3. If the exciter lamp is earthed in the Soundhead, remove the link between "EX.PREHEAT 1" terminal and BUS-BAR in Power Amplifier "A" Cabinet.

4. Connect Screen of cell co-axial lead to Earth terminal in Soundhead only if there is no connection between this earth terminal and main Projector earth, as for example in B.A.F. Soundheads type 83 and 378, otherwise only earth the screen at the amplifier end.

5. Where it is necessary for the Power Amplifiers to be placed in such a position that conduits "x and y" are required to enter changeover Switch Unit 2 instead of 1, the position of these two units must be reversed so that Changeover Switch Unit 1 is adjacent to M/C2.

6. On completion of installation the chief Projectionist should be instructed to use each channel on alternate weeks to preserve the formation of electrolytic condensers, if only one channel is required.

7. WIRE FUSE BOARD AS FOLLOWS:-

1. Amplifier "A"
2. Amplifier "B"
3. Projector No.1.
4. Projector No.2.
5. Non-Sync.
6. Field Rectifier (if required).
7. Changeover Magnet Feed (if required)
8. Spare.

THE GAUGES OF WIRE SHOWN ARE ADEQUATE FOR 1 OR 1½ K.V.A. MACHINES CONNECTED TO ANY D.C. INPUT OF FROM 100 TO 500 VOLTS.

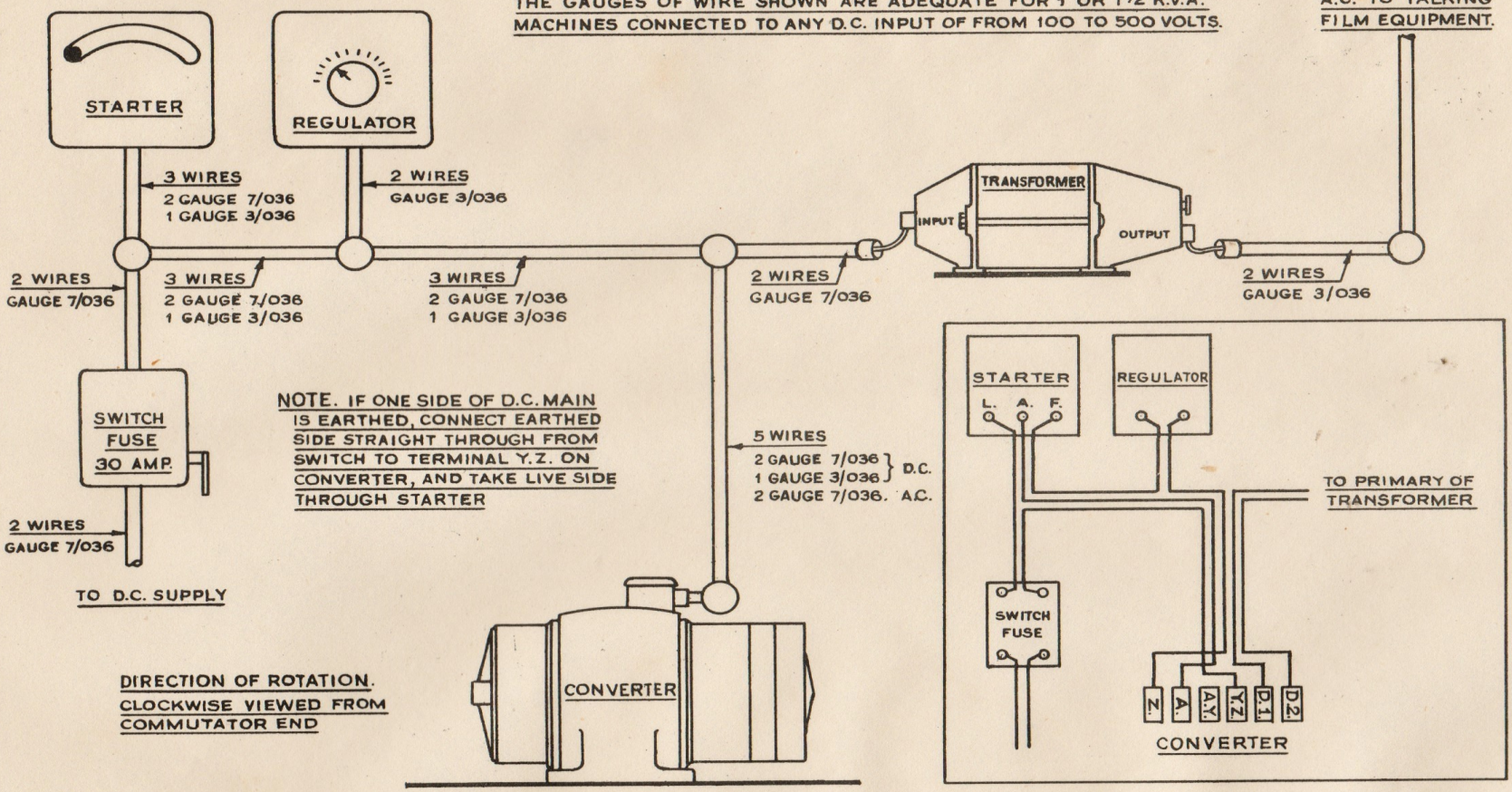

CRYPTO SINGLE WOUND CONVERTER CONDUIT CONNECTIONS. DRG. NO. D.Y. 4926.

PROCESS

BRITISH ACOUSTIC FILMS LTD.

MODIFICATIONS

▽ = NORMAL MACHINED FINISH

▽▽ = GROUND OR FINE MACHINED FINISH

▽▽▽ = FINE GROUND FINISH WITHOUT WHEELMARKS

USED ON ASSY. No.

TOLERANCES, UNLESS STATED.
ON DECIMAL DIMS. ±
ON OTHER DIMS. ±

DRN. BY L. AUDIGIER | DATE 2.2.45

CKD. BY | APPD. BY

MATERIAL

FINISH

CRYPTO SINGLE WOUND CONVERTER CONDUIT CONNECTIONS

PART NUMBER D.Y. 4926

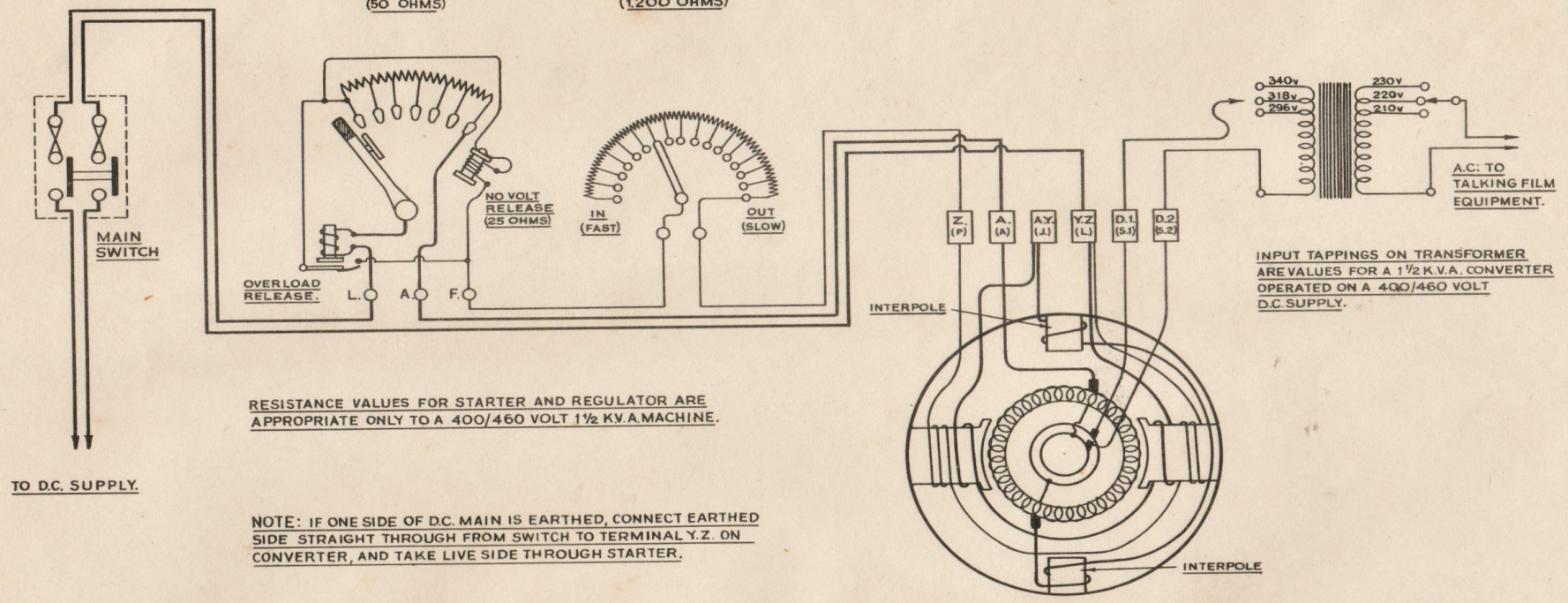

RESISTANCE VALUES FOR STARTER AND REGULATOR ARE APPROPRIATE ONLY TO A 400/460 VOLT 1½ K.V.A. MACHINE.

NOTE: IF ONE SIDE OF D.C. MAIN IS EARTHED, CONNECT EARTHED SIDE STRAIGHT THROUGH FROM SWITCH TO TERMINAL Y.Z. ON CONVERTER, AND TAKE LIVE SIDE THROUGH STARTER.

SCHEMATIC DIAGRAM OF CRYPTO SINGLE WOUND CONVERTER AND ATTENDANT EQUIPMENT.

PROCESS

DIAGRAM OF CRYPTO SINGLE WOUND CONVERTER AND ATTENDANT EQUIPMENT.
DRG. NO. DX. 4927.

BRITISH ACOUSTIC FILMS LTD.

DIAGRAM OF CRYPTO SINGLE WOUND CONVERTER & ATTENDANT EQUIPMENT

PART NUMBER DX.4927.

MODIFICATIONS

∇ = NORMAL MACHINED FINISH
∇∇ = GROUND OR FINE MACHINED FINISH
∇∇∇ = FINE GROUND FINISH WITHOUT WHEELMARKS

USED ON ASSY. No.

TOLERANCES, UNLESS STATED, ON DECIMAL DIMS. ±
ON OTHER DIMS. ±

DRN. BY AUDIGIER DATE 6·2·45
CKD. BY [illegible] APPD. BY [illegible]

MATERIAL

FINISH