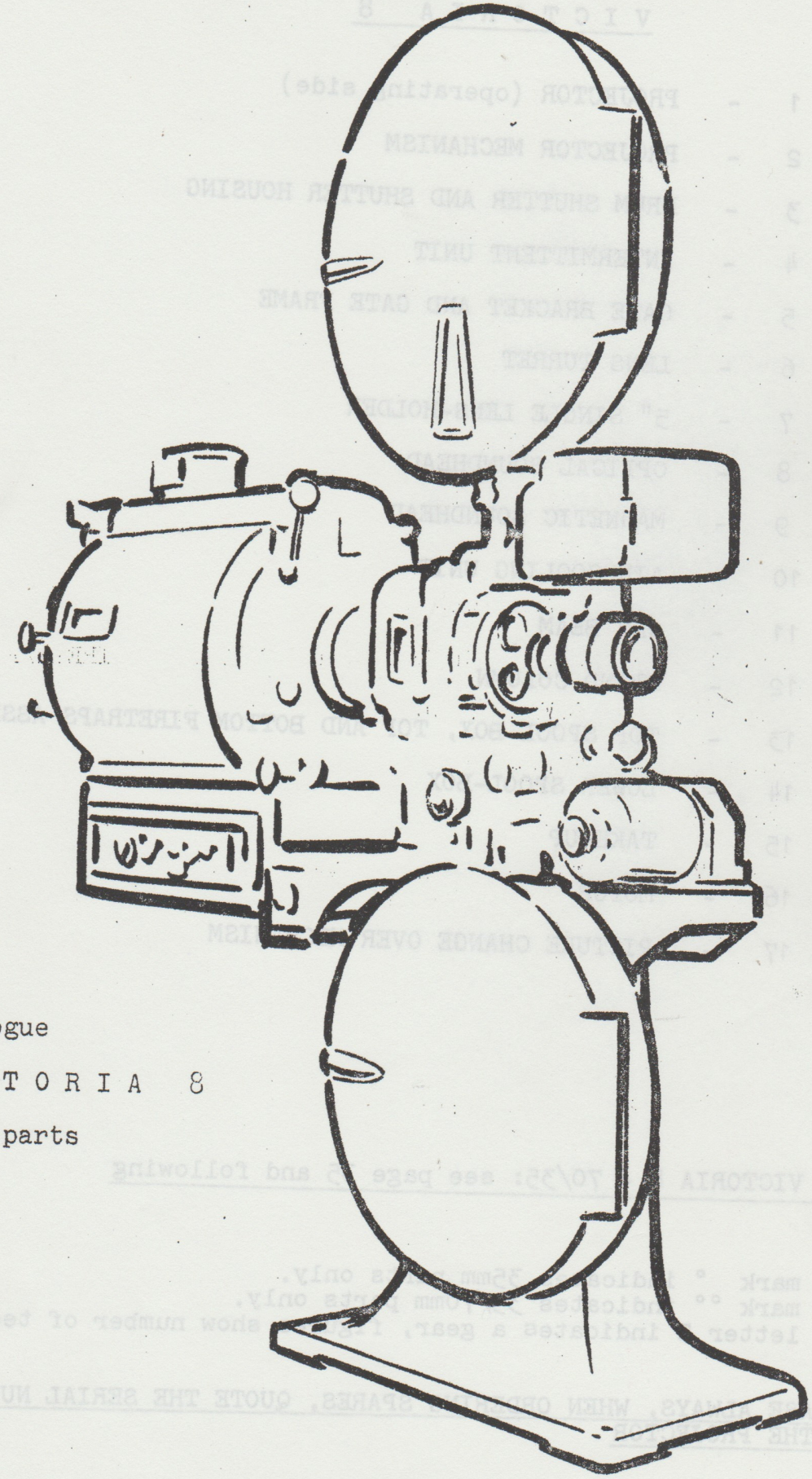

Catalogue

V I C T O R I A 8

Spare parts

V I C T O R I A 8

FOR VICTORIA 8 - 70/35: see page 35 and following

The mark ° indicates 35mm parts only.
The mark °° indicates 35/70mm parts only.
The letter Z indicates a gear, figures show number of teeth.

PLEASE ALWAYS, WHEN ORDERING SPARES, QUOTE THE SERIAL NUMBER OF THE PROJECTOR

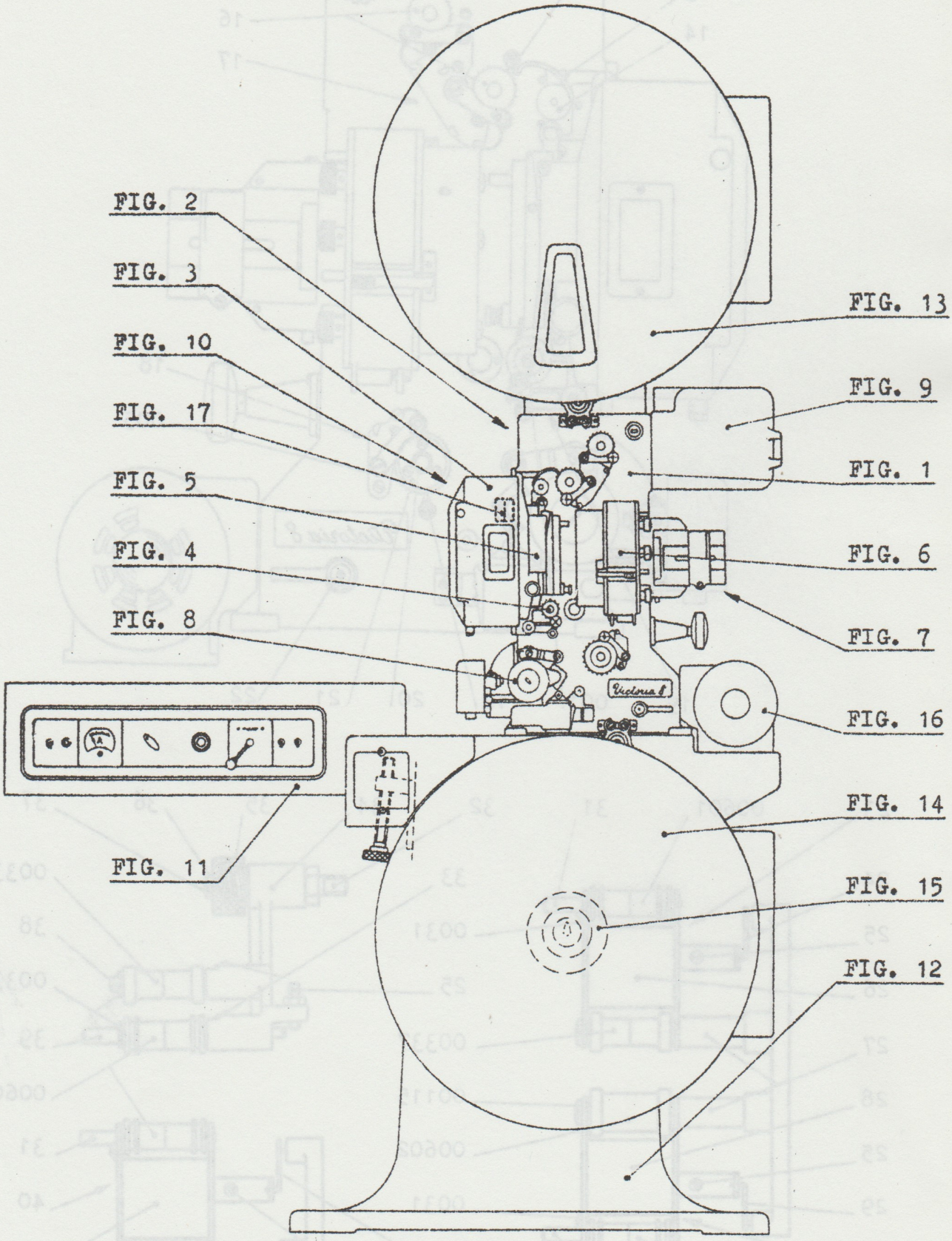
FIG. 2
FIG. 3
FIG. 10
FIG. 17
FIG. 5
FIG. 4
FIG. 8
FIG. 11
FIG. 13
FIG. 9
FIG. 1
FIG. 6
FIG. 7
FIG. 16
FIG. 14
FIG. 15
FIG. 12
Victoria 8

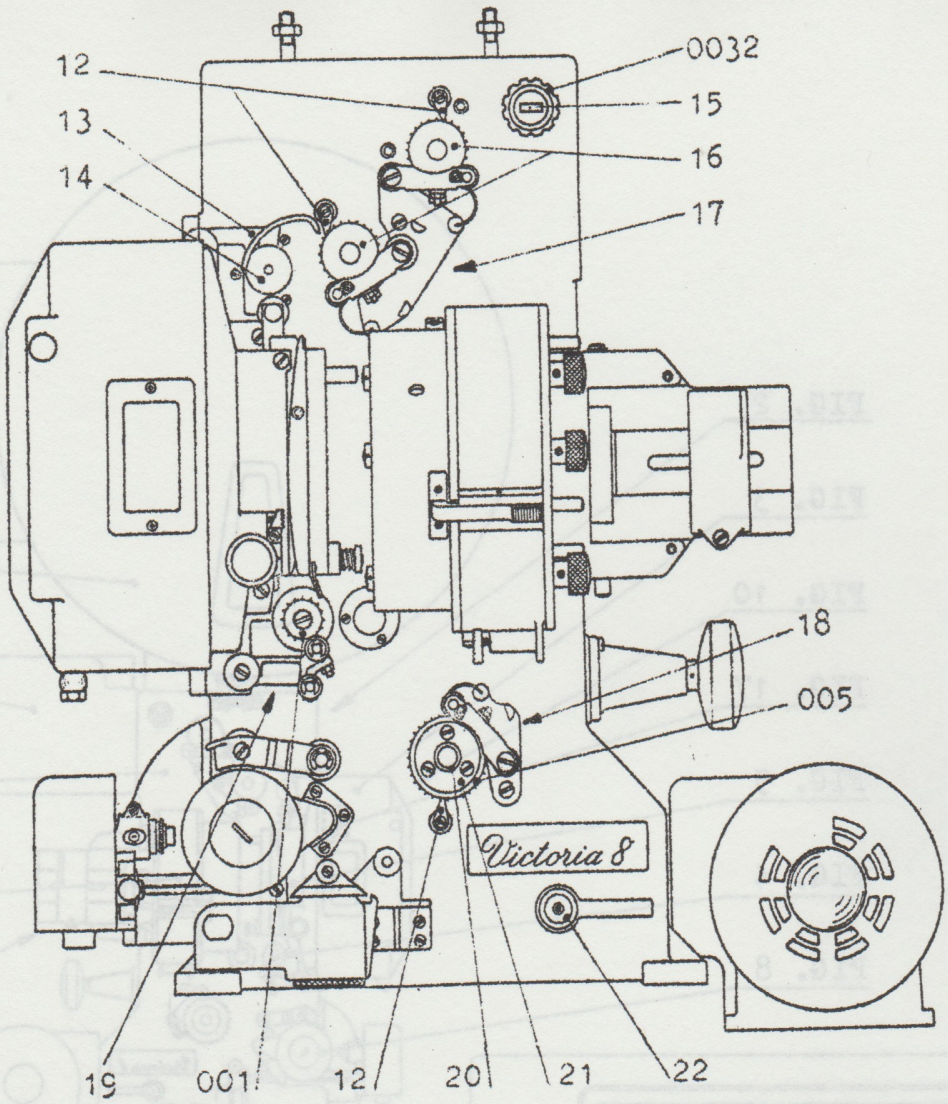
12
13
14
0032
15
16
17
18
005
Victoria 8
19
001
12
20
21
22

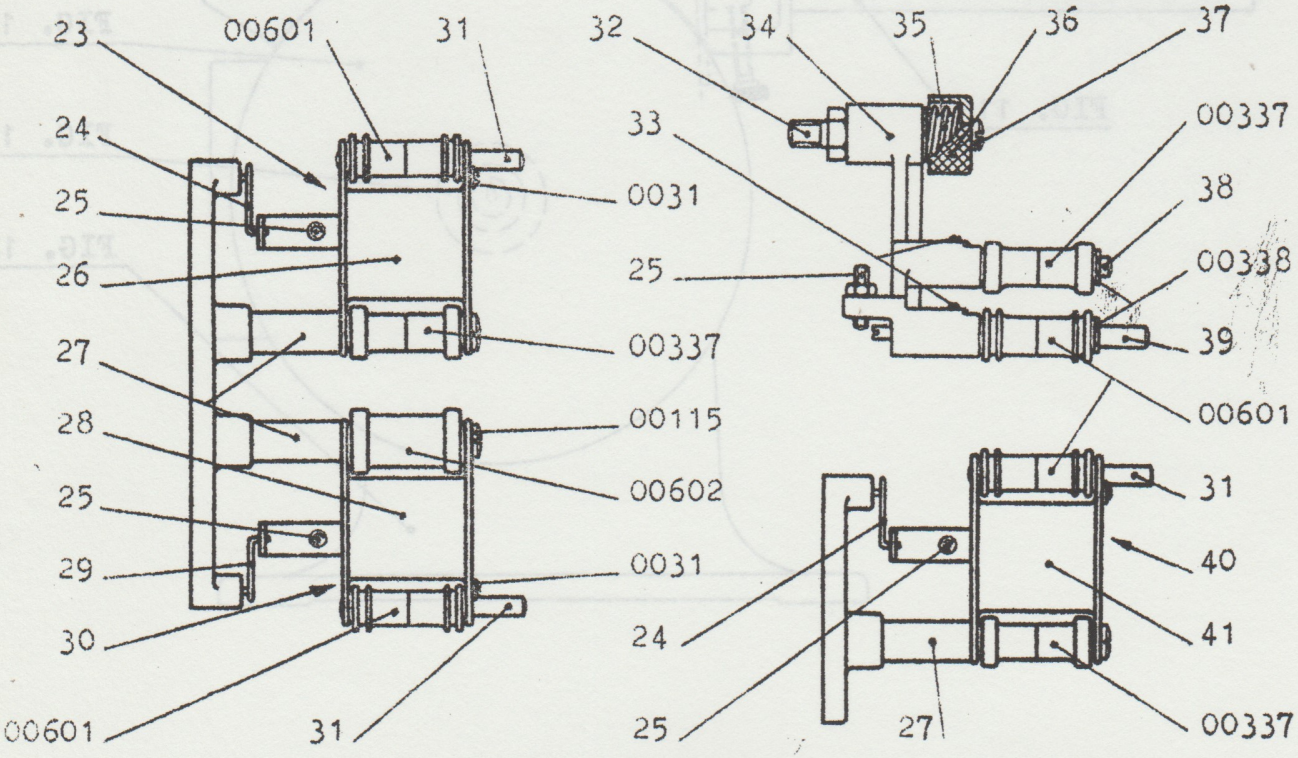
23
00601
31
24
25
26
27
28
25
29
30
00601
31
0031
00337
00115
00602
0031
32
34
35
36
37
33
00337
38
25
00338
39
00601
31
40
24
41
25
27
00337

FIG. 1

FIG. 1 - PROJECTOR (Operating side)

°001C	- 16 teeth intermittent sprocket
°005C	- 32 teeth bottom sprocket
°0031	- Roller spindle retaining washer
0032	- Upper oil sight window with bezel. "C86.oil seal."
00115	- Roller arm locking screw
°00337	- Plain roller (15mm O.D.)
°00338	- Circlip retaining rollers (6mm I.D.)
°00601	- Grooved roller (15mm O.D.)
°00602	- Plain roller (20mm O.D.)
12	- Stripper and post (top, intermediate and bottom sprockets)
13	- Mascarini safety lever
14	- Disc with shaft (Top loop trip)
15	- Oil filter magnet
°16	- 24 teeth intermediate and Top sprockets (144C)
°17	- Top and intermediate sprocket roller arm assembly complete with mounting plate
°18	- Bottom sprocket roller arm assembly complete with mounting plate
°19	- Intermittent sprocket roller arm assembly complete
°20	- Boss for bottom sprocket with washer and screws
°21	- Washer for bottom sprocket
22	- Lower oil sight window with bezel
°23	- Top sprocket roller arm assembly
24	- Pressure spring for top and bottom sprocket roller arm assemblies
°25	- Sprocket roller arm setting screw
°26	- Top sprocket roller arm only
°27	- Roller arm support spindle
°28	- Intermediate sprocket roller arm only
29	- Pressure spring for intermediate sprocket roller arm
°30	- Intermediate sprocket roller arm assembly
°31	- Grooved roller spindle
32	- Intermittent sprocket roller arm assembly
°33	- Roller spindle retaining screw
°34	- Intermittent sprocket roller arm only
35	- Intermittent sprocket roller arm spring
36	- Spring setting bush for intermittent sprocket roller assembly
37	- Screw for bush
°38	- Plain roller spindle
°39	- Grooved roller spindle
°40	- Bottom sprocket roller arm assembly
°41	- Bottom sprocket roller arm only

FIG. 2 - PROJECTOR MECHANISM

0092 - P.E.cell connector
00250 - Oil filler plug
00296 - Masking (framing) knob
51 - Oil filter body
52 - Oil filter
53 - Intermediate sprocket gear, Z.78
54 - Intermediate sprocket shaft
55 - Driving gear Z.89
56 - Spindle with screw for part no. 55 gear
57 - Spindle with screw for bevel gear
58 - Driving gear Z.90
59 - Spindle with screw for part no. 58 gear
60 - Intermittent unit driving gear, Z.54
61 - Spindle with screw for part no. 60 gear
62 - Framing shaft retaining screw
63 - Framing shaft gasket
64 - Top sprocket driving gear, Z.78
65 - Top sprocket shaft
66 - Mechanism cover gasket
67 - Mechanism cover
68 - Governor assembly
69 - Governor drive pinion, Z.17
70 - Governor spring
71 - Governor ball with arm
72 - Masking (framing) rack securing screw
73 - Masking (framing) rack
74 - Masking (framing) shaft
75 - Bottom sprocket driving gear, Z.104
76 - Ball race
77 - Oil seal
78 - Take up drive toothed belt
79 - Take up driving pinion, Z.17
80 - Oil draining tube with gasket
81 - Oil drain plug with gasket
82 - Driving mechanism toothed belt (19mm wide - Type 075") till available
82bis - Driving mechanism toothed belt (25,4mm wide - Type 100") from n. 8500
83 - Mechanism drive toothed pulley, Z.55 frequency 50 cycles
84 - Torque assembly disc
85 - Torque assembly spring
86 - Mechanism driving gear shaft
87 - Torque assembly gear Z.39
88 - Oil pump drive gear Z.24
89 - Spindle for no. 88 gear
90 - Oil pump complete assembly
91 - Oil pump driving gear, Z.24
92 - Bottom sprocket shaft

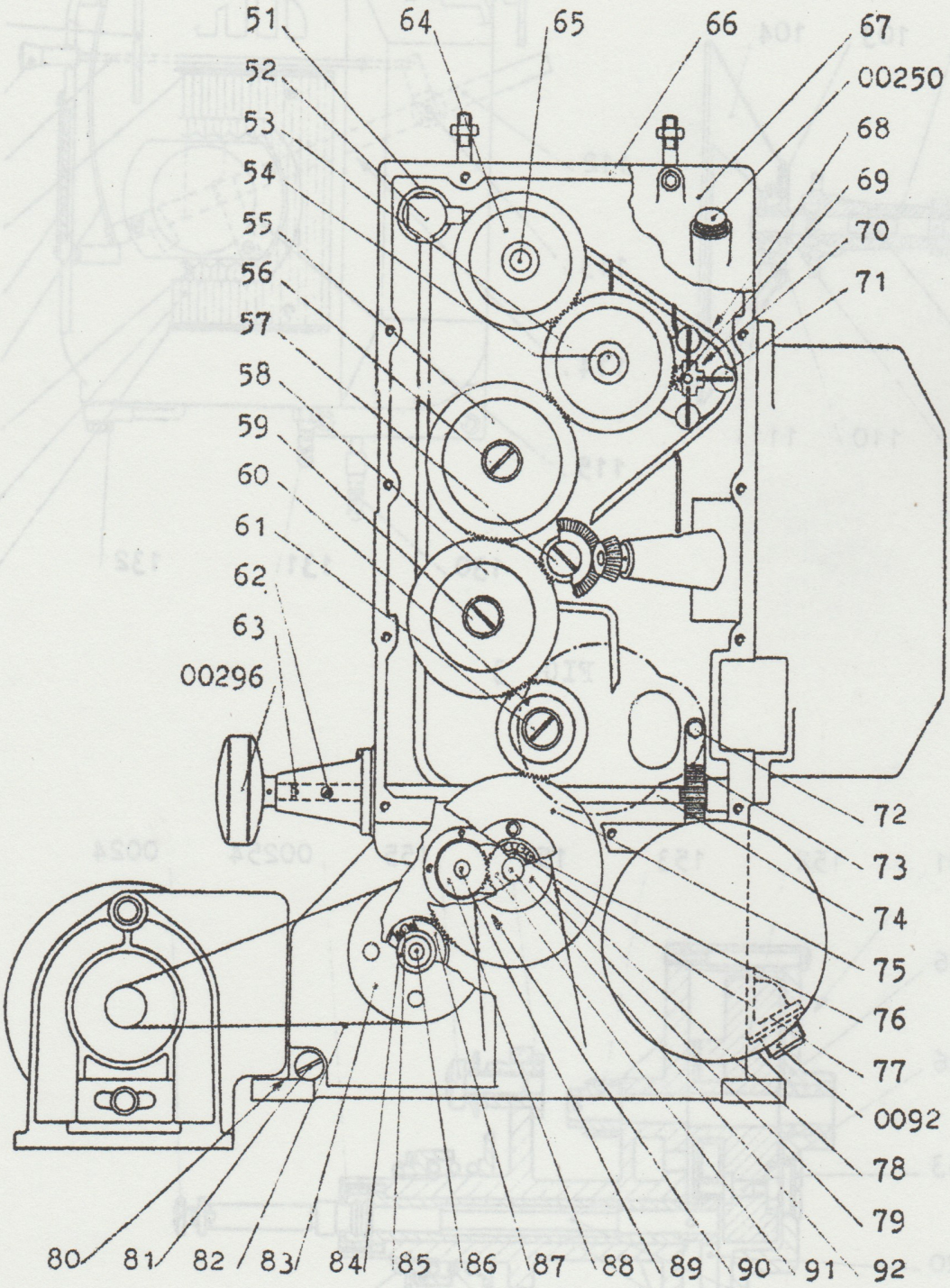
51
52
53
54
55
56
57
58
59
60
61
62
63
00296
64
65
66
67
00250
68
69
70
71
72
73
74
75
76
77
0092
78
79
80
81
82
83
84
85
86
87
88
89
90
91
92

FIG. 2

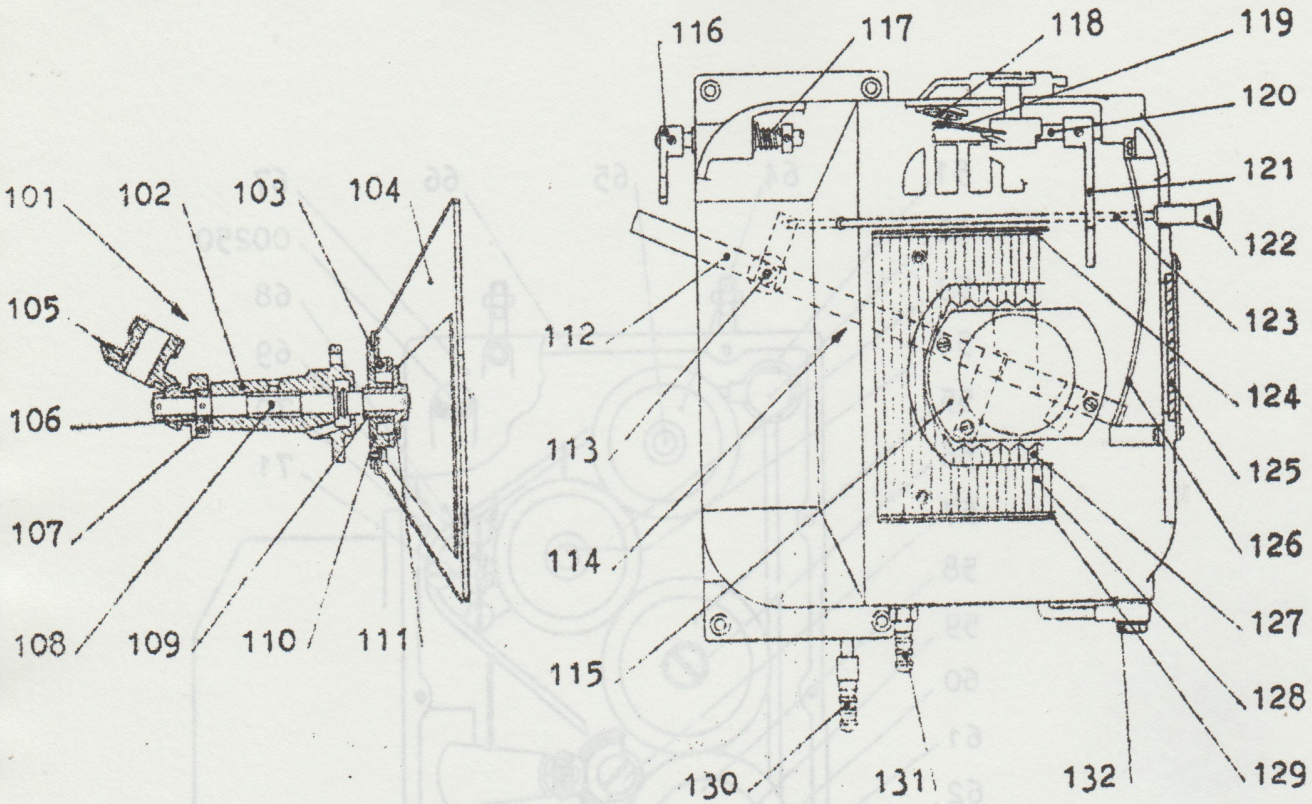
101
102
103
104
105
106
107
108
109
110
111
112
113
114
115
116
117
118
119
120
121
122
123
124
125
126
127
128
129
130
131
132

FIG. 3

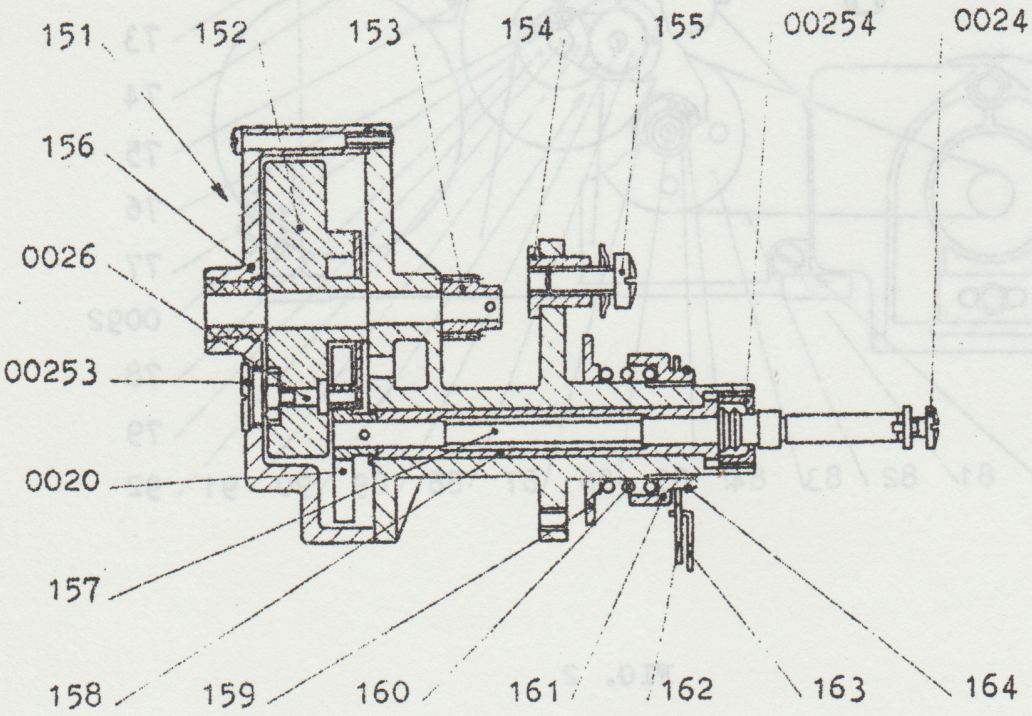
151
152
153
154
155
00254
0024
156
0026
00253
0020
157
158
159
160
161
162
163
164

FIG. 4

FIG. 3 - DRUM SHUTTER AND SHUTTER HOUSING

101 - Shutter assembly complete
102 - Shutter bearing only
103 - Torque assembly spring
104 - Conical shutter only
105 - Matched bevel gears Z.38 and Z.26, pinion Z.19 and torque assembly
106 - Dog for shutter pinion torque assembly
107 - Spring for shutter pinion torque assembly
108 - Shutter shaft
109 - Circlip 16mm O.D.
110 - Shutter torque assembly
111 - Dog for shutter torque assembly
112 - Safety shutter lever
113 - Screw for safety shutter lever
114 - Safety shutter disc with lever
115 - Safety shutter disc only
116 - Change over lever
117 - Unlatching lever spring
118 - Mascarini contact, fixed
119 - Mascarini contact, moving
120 - Unlatching lever spindle
121 - Safety shutter unlatching lever
122 - Safety shutter knob
123 - Safety shutter opening shaft
124 - Top light shield
125 - Shutter case inspection window, glass only
126 - Safety shutter lever guide complete
127 - Corrugated heat shield, inside
128 - Corrugated heat shield, outside
129 - Bottom light shield
130 - Gate cooling water inlet pipe
131 - Gate cooling water outlet pipe
132 - Water pipe union

FIG. 4 - INTERMITTENT UNIT

0020 - Maltese cross with cam pin and roller
0024 - Screw and washer securing intermittent sprocket
0026 - Cam pin and roller
00253 - Plug for roller setting
00254 - Oil seal
151 - Intermittent unit complete less sprocket
152 - Flywheel with cam, shaft and cam pinion
153 - Cam pinion, Z.13
154 - Bush for intermittent unit securing screw
155 - Intermittent unit movement securing screw with washer
156 - Intermittent unit cover
157 - Intermittent sprocket shaft
158 - Eccentric sleeve for intermittent shaft
159 - Clutch disc
160 - Clutch disc spring
161 - Bush for adjusting clutch disc spring
162 - Intermittent sprocket roller arm stop collar
163 - Collar spring
164 - Circlip for collar

FIG. 5 - GATE BRACKET AND GATE FRAME

°007 - Spring guide roller assembly
0040/9 - Insulating bushes
0057/2 - Framing lamp holder assembly
°00214 - Double aperture plate (aspect ratios to be specified) for 35mm
00279 - Adjusting screw for spring guide roller
°181 - Gate bracket assembly complete
182 - Gate bracket only
°183 - Pressure pads for top plates
184 - Framing lamp, 12 Volts - 5 Watts
°185 - Bracket for No. 007 roller complete with screw
186 - Spring for gate plate locking screw
187 - Gate plate locking screw
°188 - Upper pressure plate retaining screw
189 - Spring washer for no. 188
190 - Latch for aperture plate
191 - Spring for aperture plate latch
°192 - Pressure pad control spring
193 - Air duct
°194 - Corrugated shield
°195 - Aperture plate removable guide
196 - Water pipe union
197 - Gate latch arm
198 - Gate latch lever
°199 - Gate plate
°199bis - Gate plate with velvet
°200 - 35mm gate frame assembly complete
°201 - 35mm gate frame only
°202 - 35mm pair of pressure plates (4 pieces)
203 - Gate frame support spring retaining knob
204 - Gate frame support spring
205 - Gate frame support
206 - Gate frame opening knob spring
°207 - Pressure pad control knob
°208 - Pressure pad control knob spring
°209 - Pressure pad for lower plates
°210 - Spring for pressure pads
211 - Gate frame opening knob with retaining screw
212 - Gate frame closing lever spring
213 - Gate frame closing lever
°214 - Gate frame cover

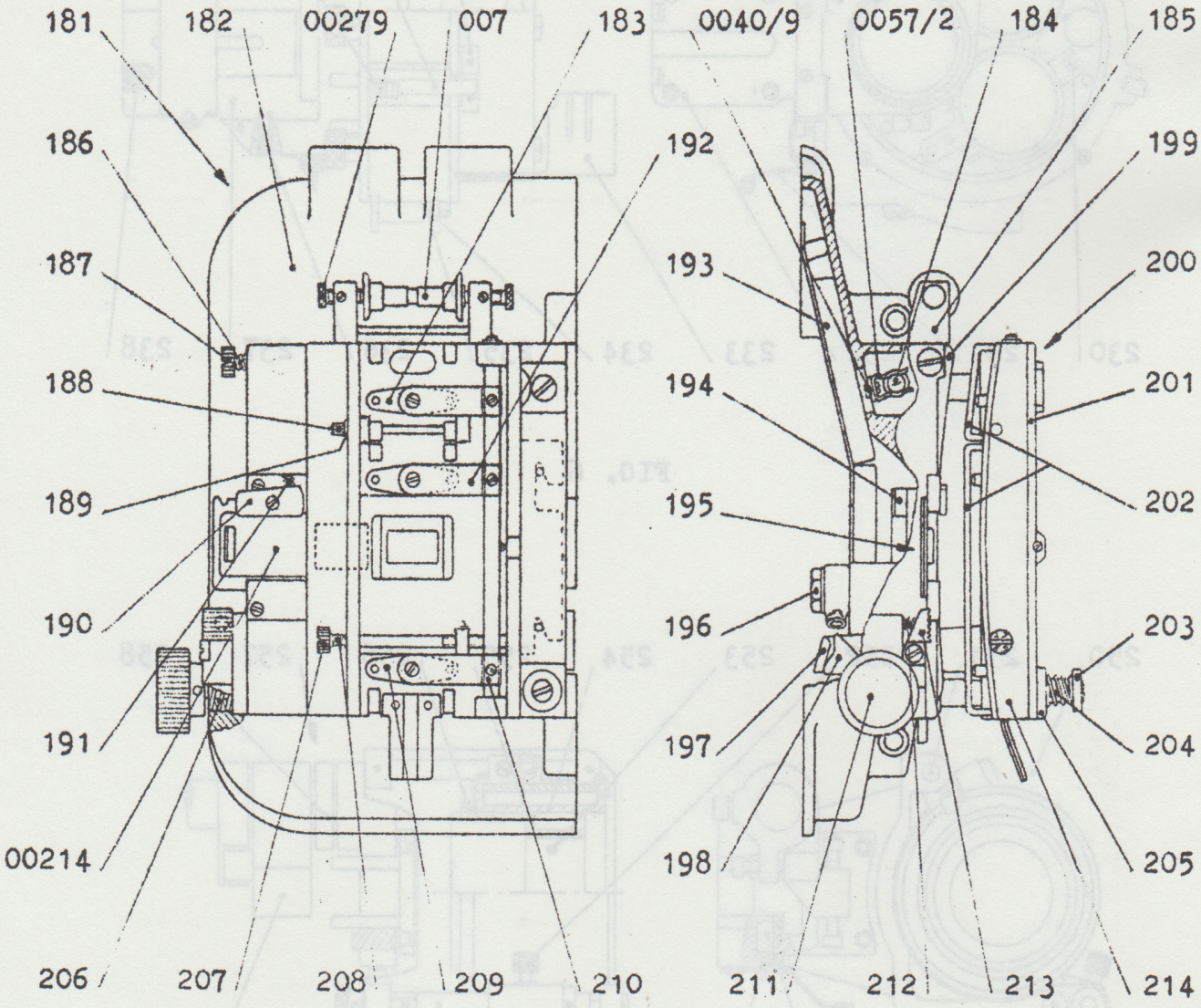
181
182
00279
007
183
0040/9
0057/2
184
185
186
192
199
187
193
200
188
194
201
189
195
202
190
196
203
191
197
204
00214
198
205
206
207
208
209
210
211
212
213
214

FIG. 5

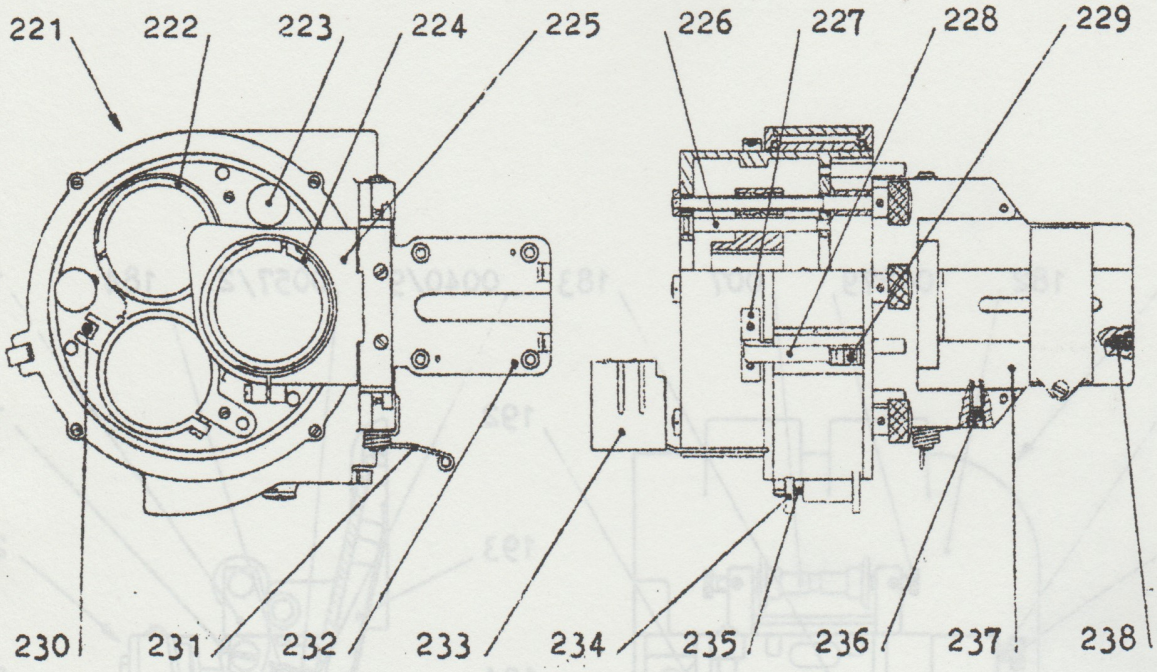
221
222
223
224
225
226
227
228
229
230
231
232
233
234
235
236
237
238

FIG. 6

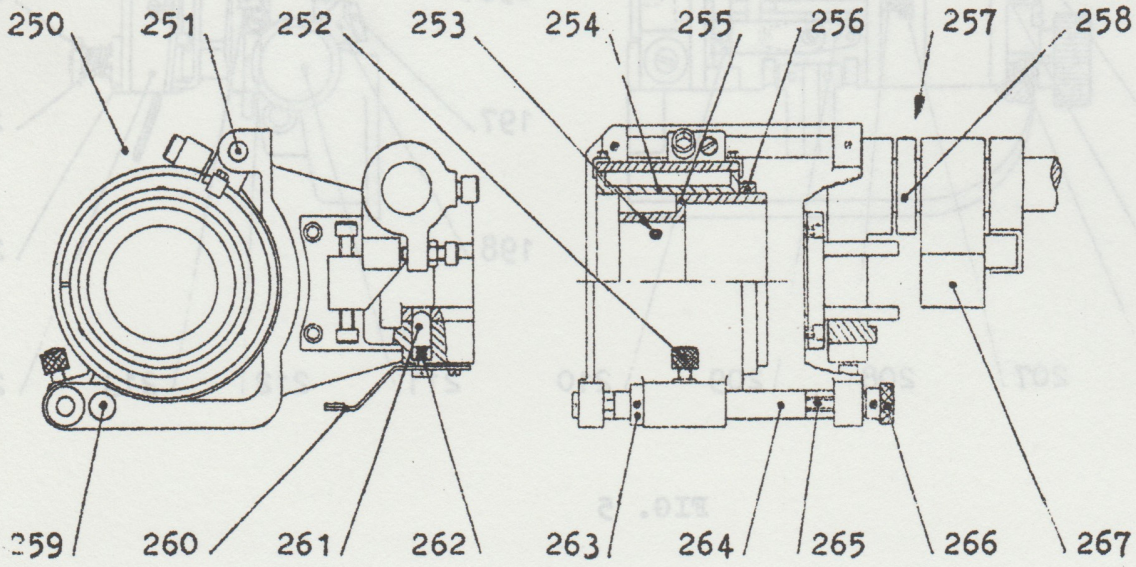
250
251
252
253
254
255
256
257
258
259
260
261
262
263
264
265
266
267

FIG. 7

FIG. 6 - LENS TURRET

221 - Three lens turret assembly complete
222 - Holding lens sleeve with focusing screw (62,5 mm)
222bis - Holding lens sleeve with focusing screw (70,6 mm)
223 - Focusing knob
224 - Eccentric sleeve dia. 70,6/62,5
224bis - Sleeve dia. 70,6/62,5
225 - Anamorphic lens holder - ring only
226 - Eccentric guide for holding lens sleeve
227 - Stop plate
228 - Stop lever
229 - Stop lever spring
230 - Stop for eccentric mount
231 - Spring for pivoting turret bracket
232 - Turret assembly support bracket
233 - Light shield
234 - Lever locking turret assembly
235 - Lever spring
236 - Spring plunger
237 - Bracket for anamorphic lens holder
238 - Spring plunger for no. 237

FIG. 7 - 5" SINGLE LENS-HOLDER

250 - 5" single lens holder assembly complete
251 - Lens sleeve guide shaft
252 - Knurled knob for locking lens sleeve
253 - Lens fixing screw
254 - 5" to 4" eccentric adaptor
255 - 4" to 70,6 adaptor
255/1 - 4" to 62,5 adaptor
255/2 - 4" to 52,5 adaptor
256 - Adaptor stop ring with screws
257 - Anamorphic lens-holder assembly
258 - Anamorphic lens stop ring
259 - Lens sleeve guide
260 - Spring plunger lever
261 - Plunger
262 - Plunger spring
263 - Lens sleeve stop ring
264 - Focusing screw bush
265 - Focusing screw
266 - Focusing knob
267 - Anamorphic lens holder only (anamorphic lens type to be specified)

FIG. 8 - OPTICAL SOUNDHEAD

008 - Filter roller 15mm O.D.
0035 - Reproducer drum with shaft and cover screw
0040 - Exciter lamp assembly complete
0040/1 - Exciter lamp housing complete
0040/2 - Exciter lamp housing cover
0040/3 - Exciter lamp holder and support bracket assembly
0040/4 - Exciter lamp insulating bushes and washers
0040/6 - Exciter lamp bottom contact spring, complete
0040/9 - Insulating bushes for part No. 0040/6
0040/10 - Exciter lamp locating spring with stud
0040/13 - Spring washer
00261 - P.E. cell housing
00261bis- Photojunction housing
00338 - Circlip securing rollers (6mm I.D.)
00339 - Circlip securing rollers (8mm I.D.)
0015 - Flanged roller (22mm O.D.)
00606 - Plain roller (19mm O.D.)
281 - Complete optical soundhead
282 - Lay on pressure roller arm and bracket assembly
283 - Lay on pressure roller arm
284 - Lay on pressure roller and arm complete
285 - Lay on pressure roller spindle
286 - Lay on pressure roller assembly pivot spindle
287 - Lay on pressure roller spring bush
288 - Lay on pressure roller spring
289 - Lay on pressure roller arm bracket
290 - Photocell bracket
291 - Flanged roller spindle
292 - Earth contact
293 - Flywheel housing cover with earth contact
294 - Spring washer
295 - Flywheel magnet
296 - Dash pot assembly complete
297 - Dash pot body
298 - Oil tank
299 - Dash pot roller spindle
300 - Flywheel housing
301 - Ball race
302 - Cover screw (for P.E. cell)
0080 - Exciter lamp
0081 - Objective lens

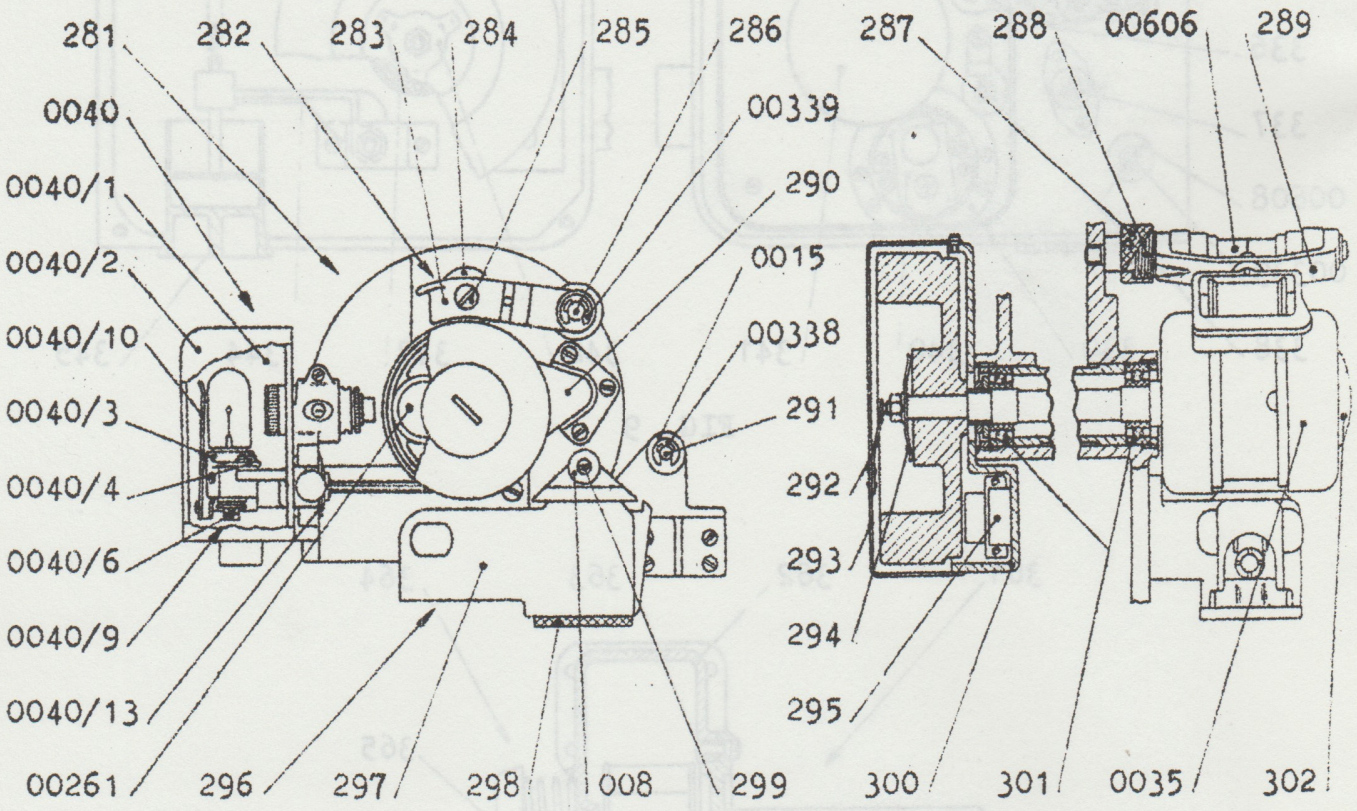
281
282
283
284
285
286
287
288
00606
289
0040
00339
0040/1
290
0040/2
0015
0040/10
00338
0040/3
291
0040/4
292
0040/6
293
0040/9
294
0040/13
295
00261
296
297
298
008
299
300
301
0035
302

FIG. 8

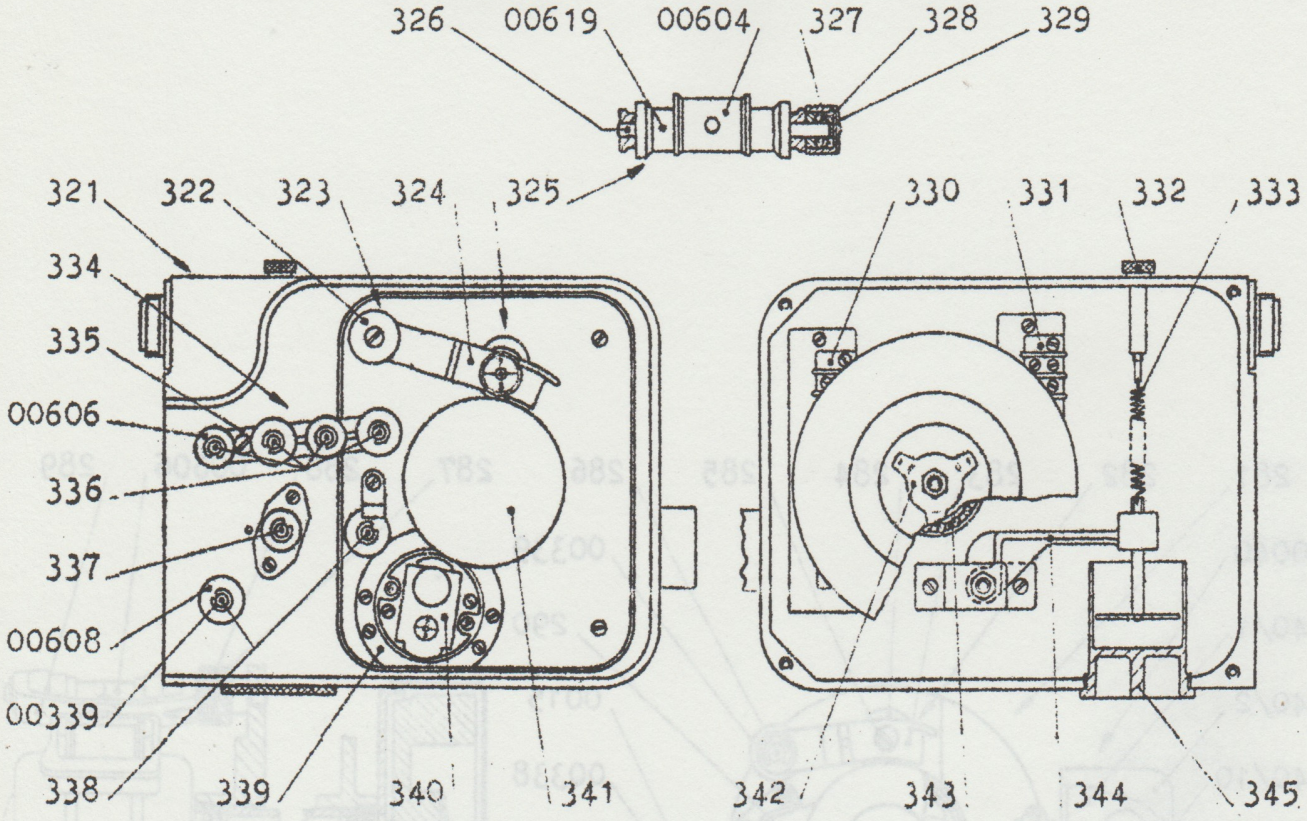
326
00619
00604
327
328
329
321
322
323
324
325
330
331
332
333
334
335
00606
336
337
00608
00339
338
339
340
341
342
343
344
345

FIG. 9

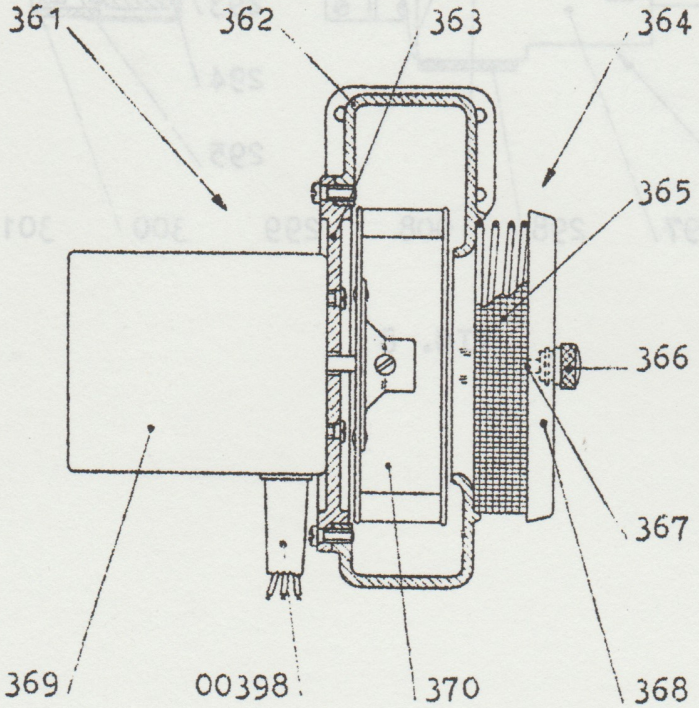
361
362
363
364
365
366
367
369
00398
370
368

FIG. 10

FIG. 9 - MAGNETIC SOUNDHEAD

00339	- Circlip securing roller (8mm I.D.)
00604	- Lay on pressure roller for 35 mm
00606	- Plain roller (19mm O.D.)
00608	- Flanged roller (22mm O.D.)
00619	- Lay on pressure roller for 70 mm
°°321	- Complete magnetic soundhead for 70/35
322	- Lay on pressure roller spring housing
323	- Lay on pressure roller spring
324	- Lay on pressure roller arm
325	- Lay on pressure roller arm and bracket assembly
326	- Eccentric spindle
327	- Lay on pressure roller arm spring
328	- Lay on pressure roller arm knob
329	- Lay on pressure roller arm knob cover indicator
330	- Terminal board for 35mm sound track
331	- Terminal board for 70mm sound track
332	- Filter roller tension screw
333	- Filter roller spring
334	- Roller arm assembly complete
335	- Roller arm only
336	- Roller spindle o.d. 8mm
337	- Filter roller spindle
338	- Spindle for flanged rollers o.d. 8mm
°339	- Base for 35mm cluster
°°339bis	- Base for 70mm cluster
°340	- 35mm magnetic cluster
°°340bis	- 70mm magnetic cluster
341	- drum with shaft
342	- spring washer for flywheel
343	- Ball race
344	- Filter roller lever with ball race
345	- Oil container
°346	- Complete magnetic soundhead for 35

FIG. 10 - AIR COOLING UNIT

00398	- Rubber sleeve
361	- Complete fan assembly (mains voltage and frequency to be specified)
362	- Fan housing
363	- Motor flange
364	- Air filter complete with cover and stud
365	- Air filter (spring and fabric)
366	- Knob securing filter cover
367	- Filter stud
368	- Filter cover
369	- Fan motor (mains voltage and frequency to be specified)
370	- Fan

FIG. 11 - ARC BEAM

381 - Beam complete with control panel and Mascarini safety device
382 - Control panel only
383 - Arc supply pilot lamp
384 - Main motor starter with resistors (value in ohms to be specified)
385 - Motor starter resistor (value in ohms to be specified)
386 - Bolts securing lamphouse
387 - Arc supply control switch
388 - Exciter lamp ammeter
389 - Mascarini master switch
390 - Exciter lamp rheostat with knob
391 - Handle for main motor switch
392 - Exciter lamp switch
393 - Framing lamp switch
394 - Terminal board cover

to serial number 8399

395 - Terminal board complete
396 - Arc Fuse (120 amp for Z/420 Arc - 150 amp for SZ/450 Arc)
397 - Porcelain 5 amp fuse
398 - Glass 1 amp fuse

from serial number 8400

399 - Terminal board complete
400 - Glass 5 amp fuse (for main motor and exciter lamp)
401 - Glass 1 amp fuse (for framing lamp)

FIG. 12 - STAND COLUMN

411 - Main motor support
412 - Mechanism beam
413 - Mechanism beam securing screws
414 - Motor terminal board
415 - Magnetic preamplifier terminal board
416 - D.C. ower supply for exciter lamp (voltage to be advised)
417 - Base levelling screw with nut
418 - Belt cover securing screw
419 - Belt cover
420 - Tilting device complete
421 - Tilting screw
422 - Tilting screw bracket
423 - Terminal board
424 - Rear cover complete
425 - Square head screw for setting the beam

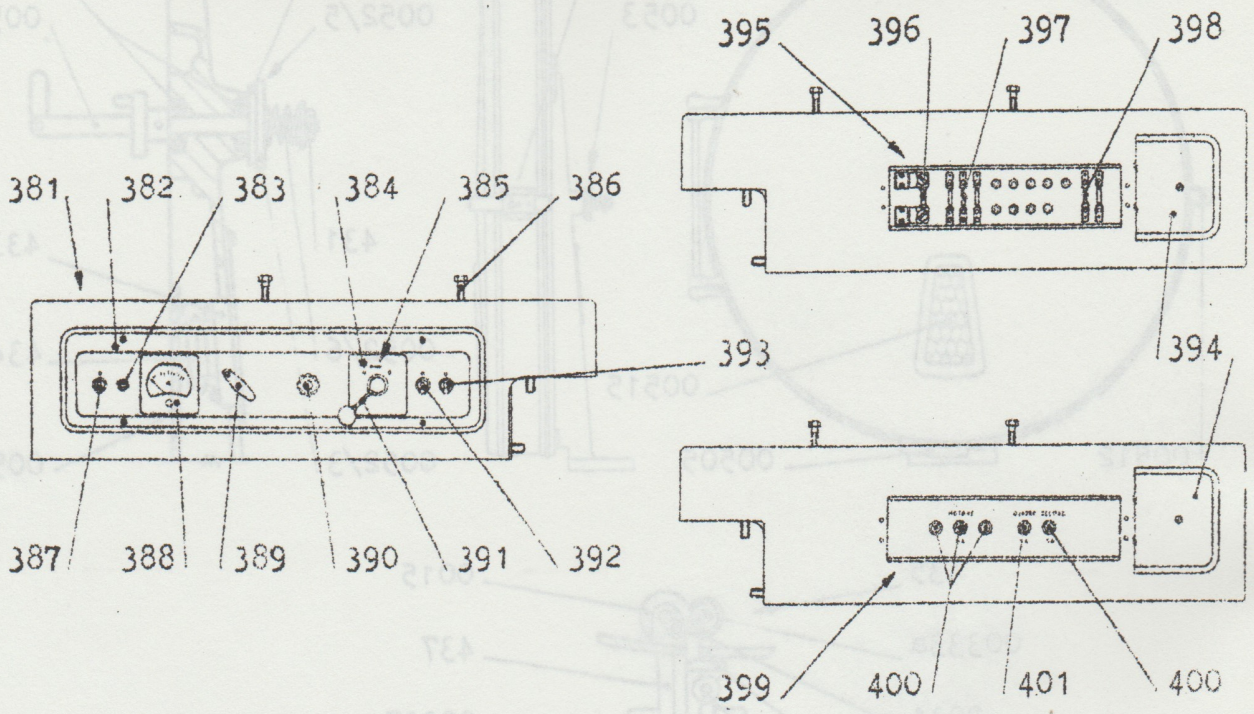
381
382
383
384
385
386
387
388
389
390
391
392
393
394
395
396
397
398
399
400
401
400

FIG. 11

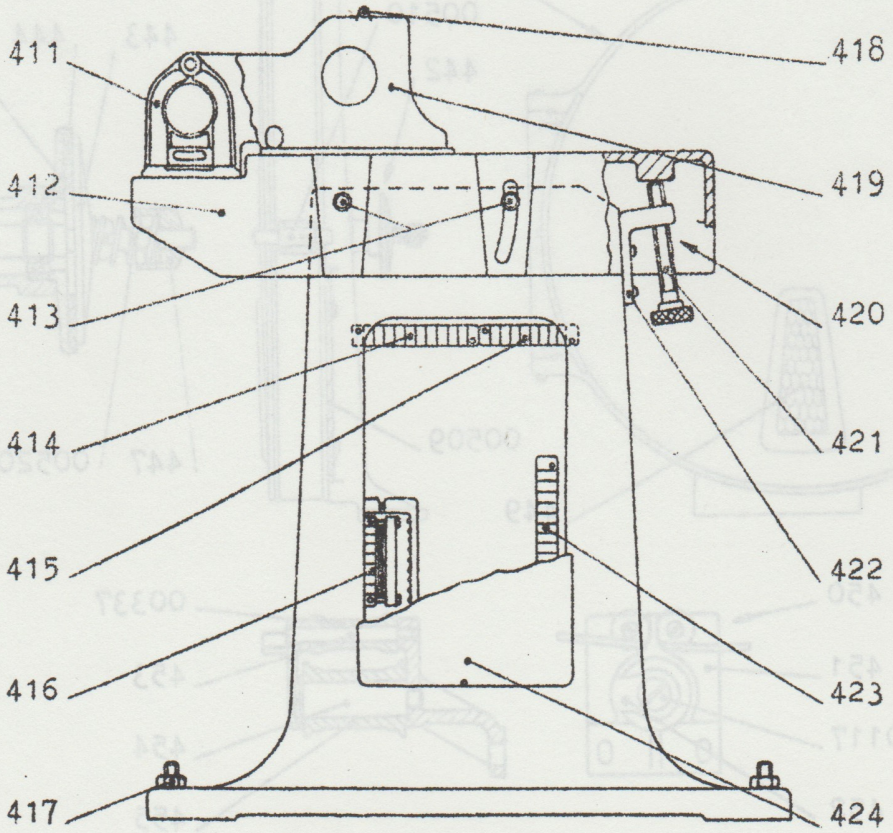
411
412
413
414
415
416
417
418
419
420
421
422
423
424

FIG. 12

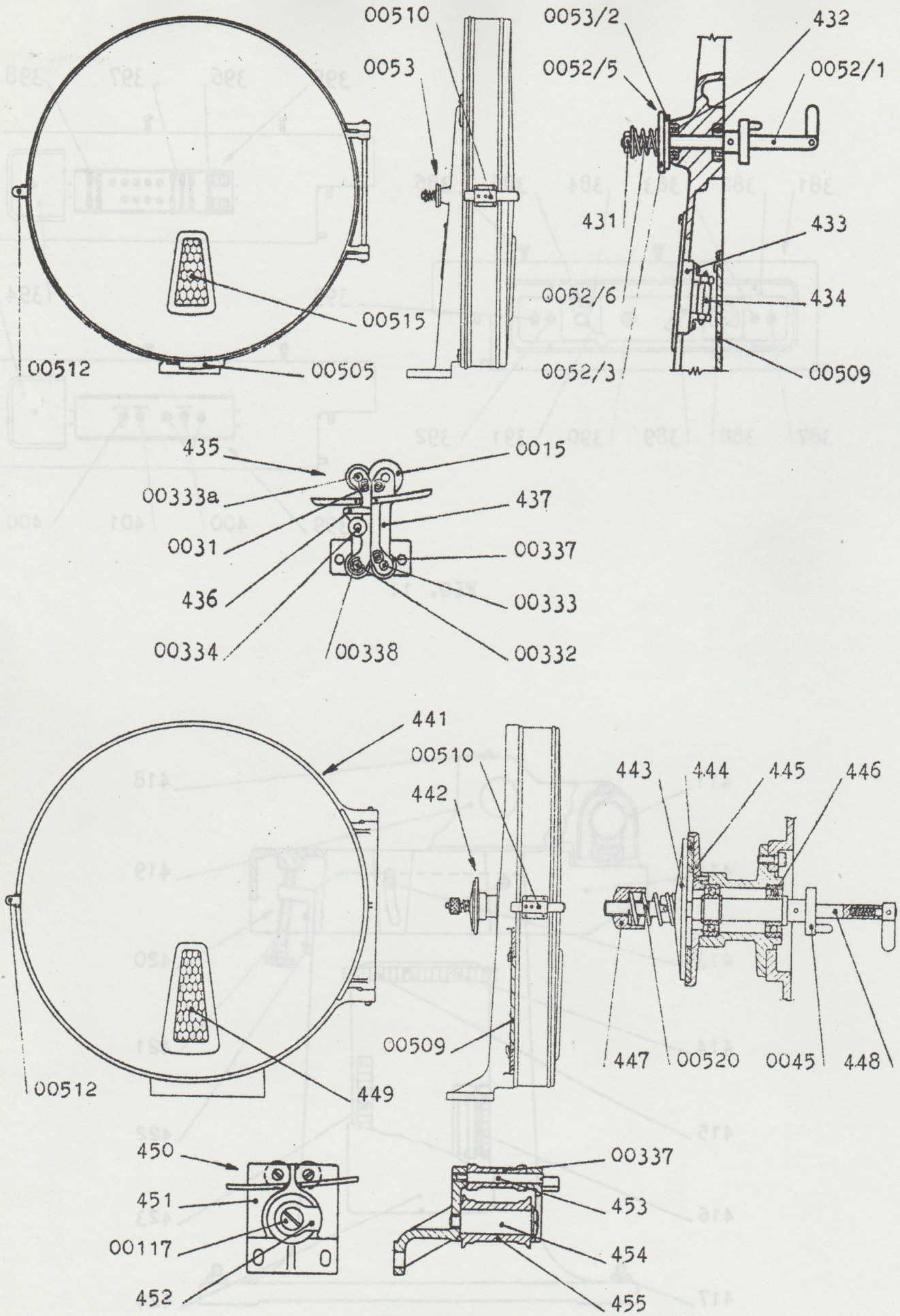
00510
0053
0053/2
432
0052/5
0052/1
431
433
0052/6
434
00515
00512
00505
0052/3
00509
435
0015
00333a
437
0031
00337
436
00333
00334
00338
00332
441
00510
442
443
444
445
446
00509
447
00520
0045
448
00512
449
450
00337
451
453
00117
454
452
455

FIG. 13

FIG. 13 - TOP SPOOL-BOX, TOP AND BOTTOM FIRETRAPS ASSEMBLIES
(to serial number 8425)

°0015 - Flanged roller (22mm O.D.)
°0031 - Roller spindle retaining washer
°0052/1 - Spool spindle with driving collar 9mm diameter
°0052/3 - Clutch pressure plate
°0052/5 - Clutch insert (leather)
°0052/6 - Clutch spring
°0053 - Clutch and shaft complete
°0053/2 - Clutch disc, fixed
°00332 - Firetrap roller spindle, hinged section
°00333 - Firetrap roller spindle, fixed section
°00333a - Top roller spindle, hinged section
°00334 - Latch knob complete
°00337 - Plain roller (15mm o.d.)
°00338 - Circlip retaining roller
°00505 - Cover for top fire trap
00509 - Inspection window, rear
00510 - Spool box catch bracket with spring
°00512 - Spool box catch
°00515 - Inspection window, front
°431 - Clutch spring tension nut
°432 - Ball race
433 - Lamp-holder
434 - Lamp
°435 - Top firetrap complete
°436 - Top firetrap, hinged section only
°437 - Top firetrap, fixed section only

FIG. 13 - TOP SPOOL-BOX
(from serial number 8426)

°0045 - Spool drive collar
00117 - Roller lock screw
°00337 - Plain roller (15mm o.d.)
00509 - Inspection window, rear
00510 - Latch bracket with spring
°00512 - Spool-box catch
00520 - Clutch spring
°441 - Top spool-box complete with clutch and shaft
°442 - Clutch and shaft complete
443 - Clutch pressure plate
444 - Clutch insert (felt)
445 - Clutch disc, fixed
446 - Ball race
447 - Clutch spring tension nut
°448 - Spool spindle with driving collar, 9mm diameter
449 - Inspection window, front
°450 - Top firetrap, complete
°451 - Top firetrap frame only
°452 - Top firetrap safety plate
°453 - Roller spindle
°454 - Flanged roller spindle
°455 - Flanged roller (30mm o.d.)

FIG. 14 - LOWER SPOOL-BOX (to serial number 8425)

°0015 - Flanged roller (22mm O.D.)
°0031 - Roller spindle retaining washer
°00243/2 - Bottom firetrap hinged section only
°00332 - Firetrap spindle, hinged section
°00333 - Firetrap roller spindle, fixed section
°00333a - Bottom roller spindle, hinged section
°00334 - Latch knob complete
°00337 - Plain roller (15mm O.D.)
°00338 - Circlip retaining roller
°00506 - Cover for bottom firetrap
00510 - Spool box catch bracket with spring
°00512 - Spool box catch
°461 - Bottom firetrap, complete
°462 - Bottom firetrap, fixed section only

FIG. 14 - LOWER SPOOL-BOX (from serial number 8426)

00117 - Roller lock screw
°00337 - Plain roller (15mm O.D.)
00510 - Spool-box latch bracket with spring
°00512 - Spool-box catch
°452 - Bottom firetrap safety plate
°453 - Roller spindle
°454 - Flanged roller spindle
°455 - Flanged roller (30mm O.D.)
°471 - Bottom spool-box complete, less take-up assembly
°472 - Bottom firetrap complete
°473 - Bottom firetrap frame only

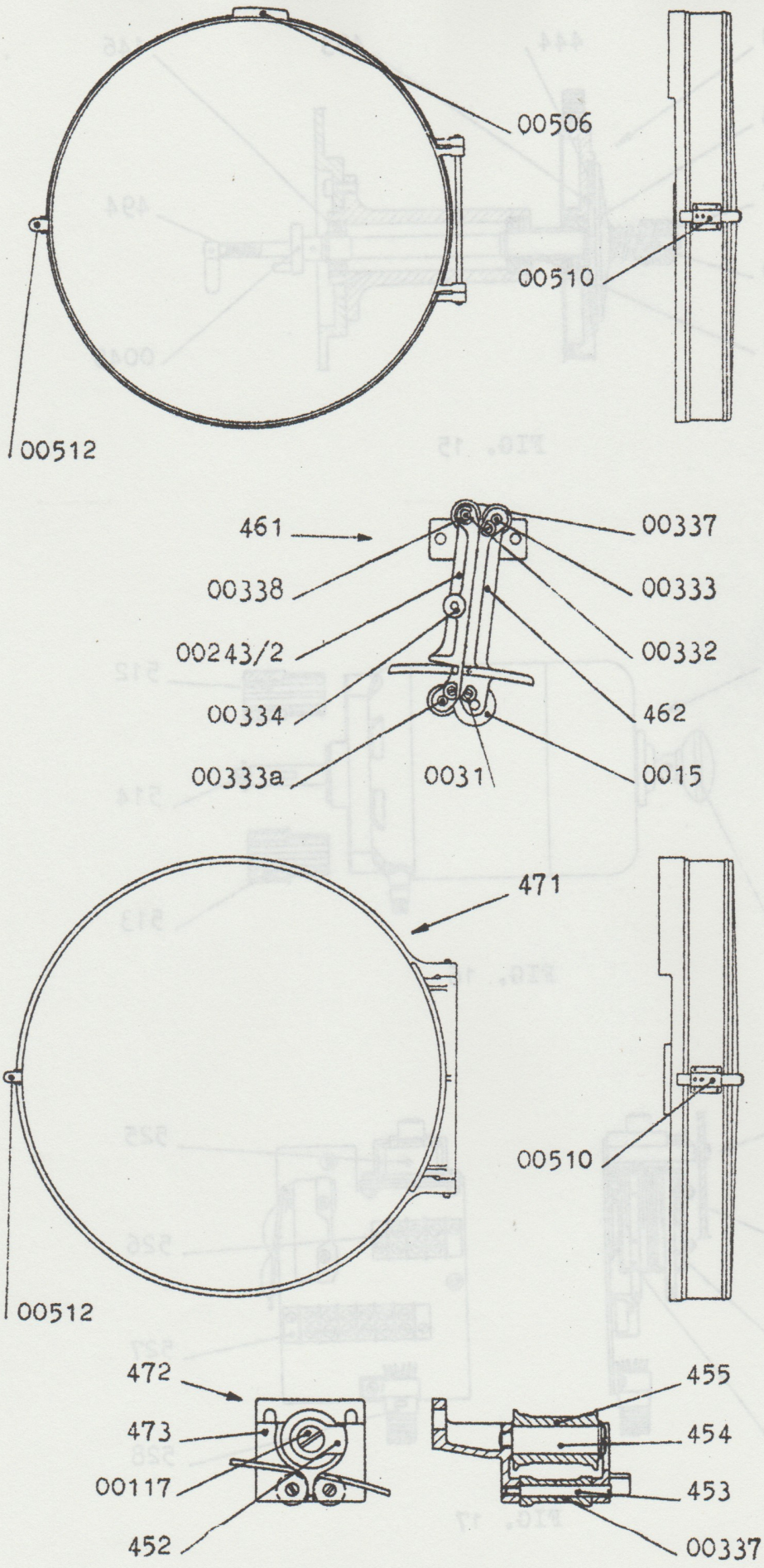
00506
00510
00512
461
00338
00243/2
00334
00333a
00337
00333
00332
462
0031
0015
471
00510
00512
472
473
00117
452
455
454
453
00337

FIG. 14

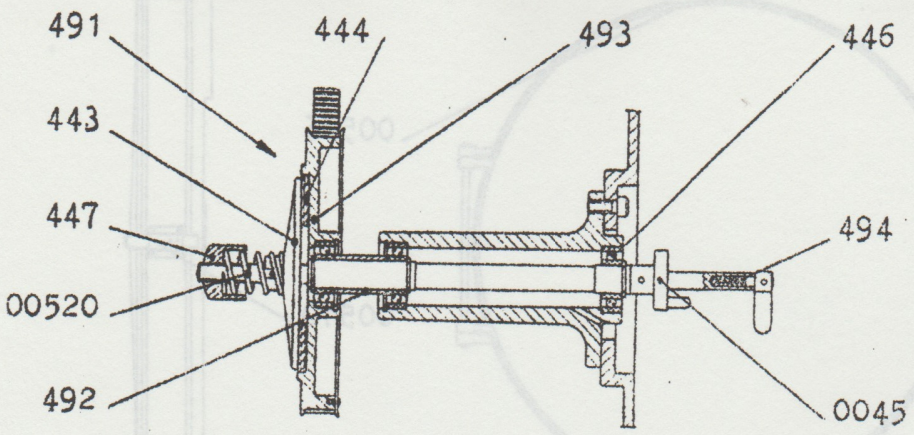

FIG. 15

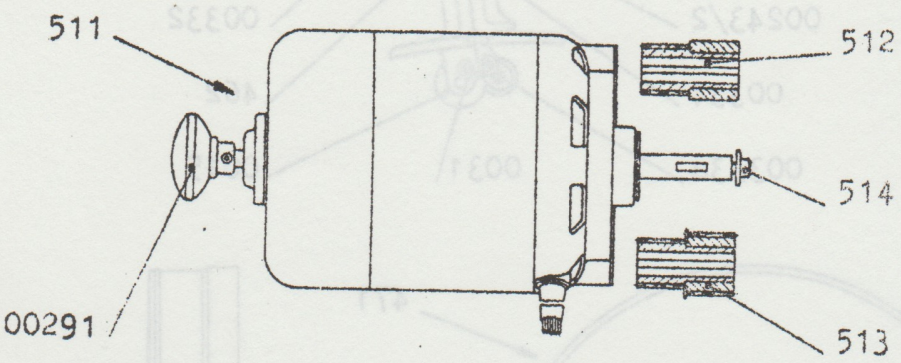

FIG. 16

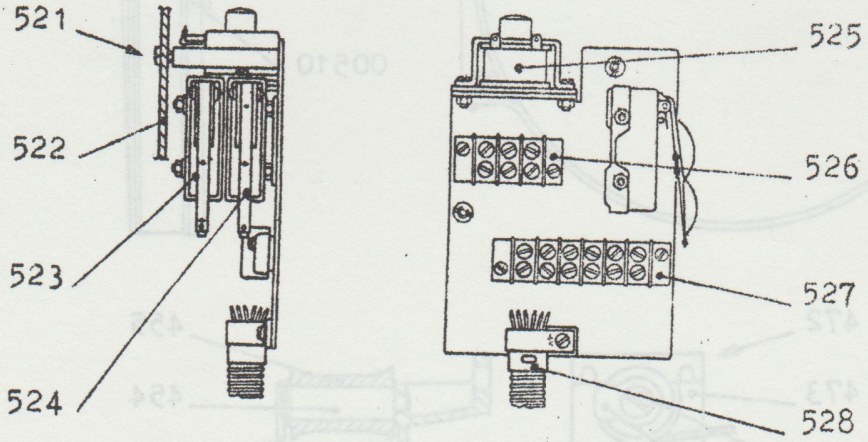

FIG. 17

FIG. 15 - TAKE-UP

°0045 - Spool driving collar
°00520 - Clutch spring
443 - Clutch pressure plate
444 - Clutch insert (felt)
446 - Ball race
447 - Clutch spring tension nut
°491 - Take-up assembly complete
°492 - Bush
493 - Take-up toothed pulley
°494 - Spool spindle with driving collar assembly 9mm

FIG. 16 - MOTOR

00291 - Inching knob
511 - Projector drive motor (mains voltage and frequency to be specified)
°512 - Motor toothed pulley for 35mm with screw
Z.18 50 cycles 24 pictures
°512a - Motor toothed pulley for 35mm with screw
Z.19 50 cycles 25 pictures
°°513 - Motor toothed pulley for 70/35mm with screw
Z.18 50 cycles 24 pictures
Z.22 50 cycles 30 pictures
°°513a - Motor toothed pulley for 70/35mm with screw
Z.19 50 cycles 25 pictures
Z.22 50 cycles 30 pictures
°°513b - Motor toothed pulley for 70/35mm with screw
Z.16 60 cycles 24 pictures
Z.20 60 cycles 30 pictures
514 - Pinion securing screw with washer

FIG.17 - PICTURE CHANGEOVER MECHANISM

521 - Complete change over mechanism no.116 lever
522 - Cover
523 - Microswitch for sound change over
524 - Microswitch for picture change over
525 - Solenoid assembly
526 - Three way terminal board
527 - Six way terminal board
528 - Cable form

-26-

FIG. 18 - COMANDO A DISTANZA OBBIETTIVO

10-1810	Comando obbiettivo completo
10-1812	Motore 50 Hz (preciasare tensione)
10-1816	Ingranaggio motore
10-1818	Ingranaggio conduttore
10-1820	Bottone regolazione
10-1821	Disco frizione
10-1822	Rosetta elastica

FIG. 18 - COMMANDE FOYER A DISTANCE

10-1810	Commande foyer complet
10-1812	Moteur 50 Hz (préclaser tension)
10-1816	Engrenage moteur
10-1818	Engrenage conduit
10-1820	Bouton
10-1821	Disque friction
10-1822	Rondelle elastique

FIG. 18 - REMOTE FOCUS UNIT

10-1810	Remote focus assembly complete
10-1812	Motor 50 Hz (specify voltage)
10-1816	Motor gear
10-1818	Drive gear
10-1820	Knob
10-1821	Clutch insert
10-1822	Spring washer

FIG. 19 - COMANDO A DISTANZA QUADRO

8V-1830	Comando quadro completo
8V-1836	Ingranaggio motore
8V-1837	Ingranaggio conduttore
8V-1838	Disco frizione
8V-1840	Rosetta elastica
8V-1842	Dado regolazione frizione
8V-1843	Prolunga
8V-1847	Motore 50 Hz (preciasare tensione)

FIG. 19 - COMMANDE CADRAGE A DISTANCE

8V-1830	Commande cadrage complet
8V-1836	Engrenage moteur
8V-1837	Engrenage conduit
8V-1838	Disque friction
8V-1840	Rondelle elastique
8V-1842	Écrou réglage friction
8V-1843	Prolongation
8V-1847	Moteur 50 Hz (préclaser tension)

FIG. 19 - REMOTE FRAMING UNIT

8V-1830	Remote framing assembly complete
8V-1836	Motor gear
8V-1837	Drive gear
8V-1838	Clutch insert
8V-1840	Spring washer
8V-1842	Clutch tension nut
8V-1843	Extension shaft
8V-1847	Motor 50 Hz (specify voltage)

FIG. 18 - COMANDO A DISTANZA OBBIETTIVO

10-1810	Comando obbiettivo completo
10-1812	Motore 50 Hz (precisare tensione)
10-1816	Ingranaggio motore
10-1818	Ingranaggio condotto
10-1820	Bottone regolazione
10-1821	Disco frizione
10-1822	Rosetta elastica

FIG. 18 - REMOTE FOCUS UNIT

10-1810	Remote focus assembly complete
10-1812	Motor 50 Hz (specify voltage)
10-1816	Motor gear
10-1818	Drive gear
10-1820	Knob
10-1821	Clutch insert
10-1822	Spring washer

FIG. 18 - COMMANDE FOYER A DISTANCE

10-1810	Commande foyer complet
10-1812	Moteur 50 Hz (préciser tension)
10-1816	Engrenage moteur
10-1818	Engrenage conduit
10-1820	Bouton
10-1821	Disque friction
10-1822	Rondelle elastique

FIG. 19 - COMANDO A DISTANZA QUADRO

8V-1830	Comando quadro completo
8V-1836	Ingranaggio motore
8V-1837	Ingranaggio condotto
8V-1838	Disco frizione
8V-1840	Rosetta elastica
8V-1842	Dado regolazione frizione
8V-1843	Prolunga
8V-1847	Motore 50 Hz (precisare tensione)

FIG. 19 - REMOTE FRAMING UNIT

8V-1830	Remote framing assembly complete
8V-1836	Motor gear
8V-1837	Drive gear
8V-1838	Clutch insert
8V-1840	Spring washer
8V-1842	Clutch tension nut
8V-1843	Extension shaft
8V-1847	Motor 50 Hz (specify voltage)

FIG. 19 - COMMANDE CADRAGE A DISTANCE

8V-1830	Commande cadrage complet
8V-1836	Engrenage moteur
8V-1837	Engrenage conduit
8V-1838	Disque friction
8V-1840	Rondelle elastique
8V-1842	Ecrou réglage friction
8V-1843	Prolongation
8V-1847	Moteur 50 Hz (préciser tension)

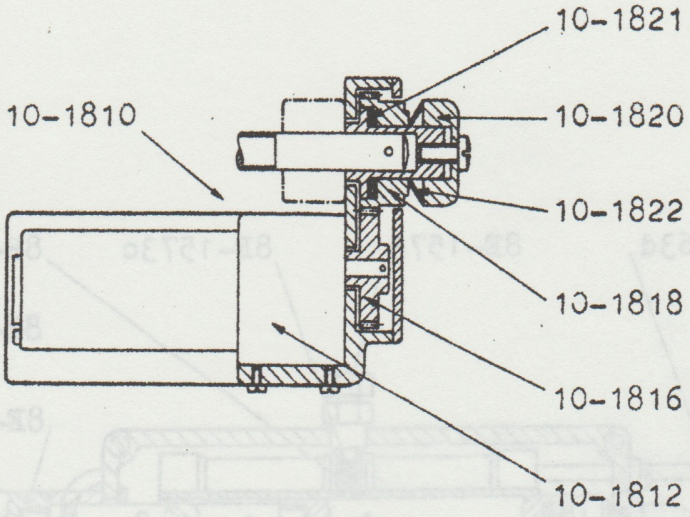
10-1821
10-1810
10-1820
10-1822
10-1818
10-1816
10-1812

FIG. 18

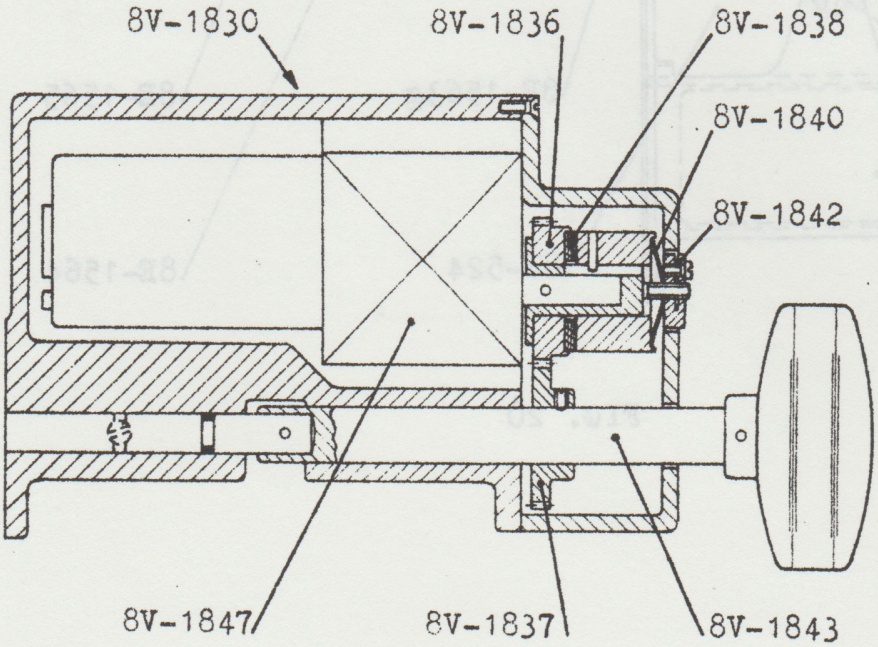
8V-1830
8V-1836
8V-1838
8V-1840
8V-1842
8V-1847
8V-1837
8V-1843

FIG. 19

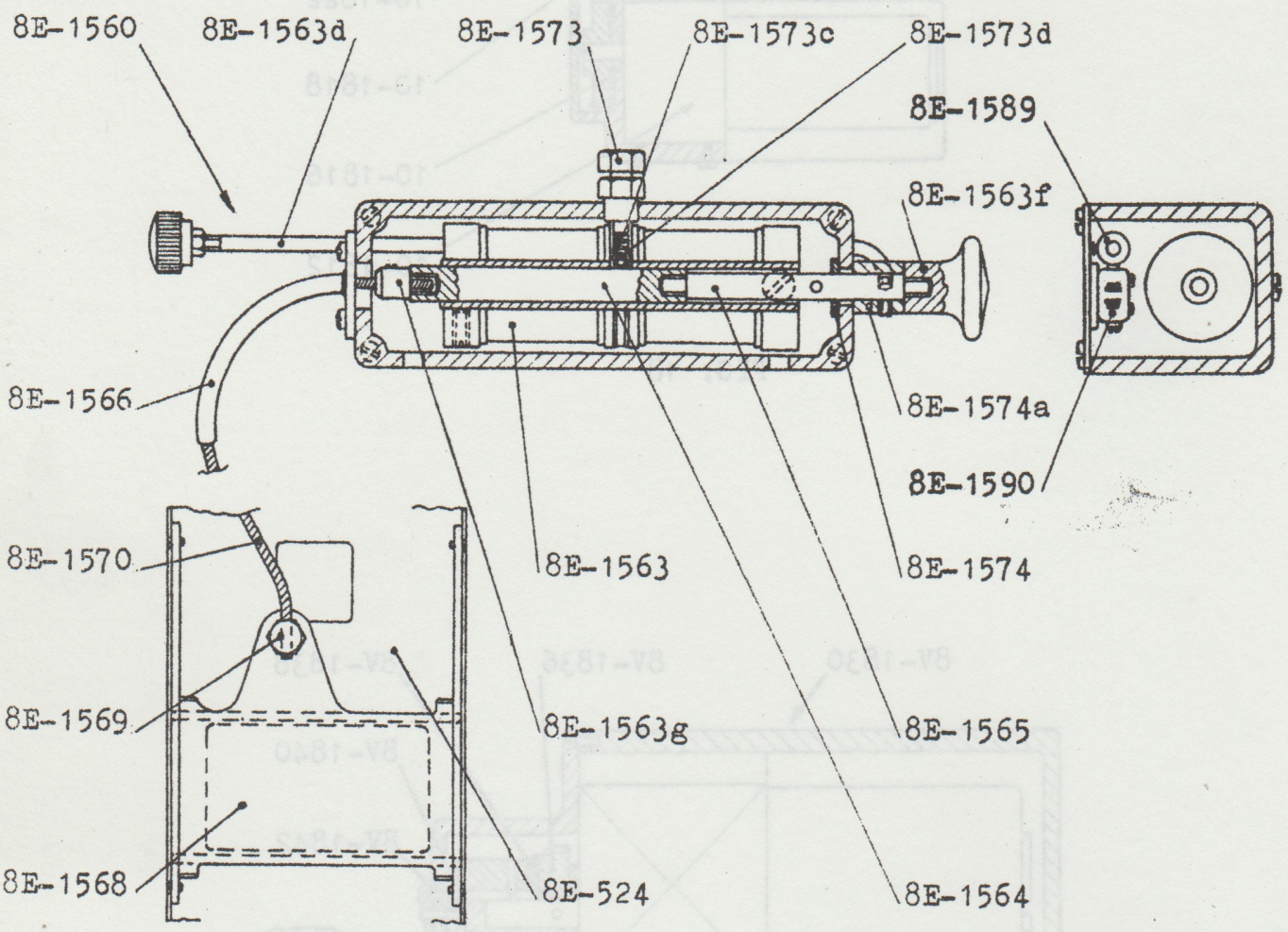
8E-1560
8E-1563d
8E-1573
8E-1573c
8E-1573d
8E-1589
8E-1563f
8E-1566
8E-1574a
8E-1590
8E-1570
8E-1563
8E-1574
8E-1569
8E-1563g
8E-1565
8E-1568
8E-524
8E-1564

FIG. 20

FIG. 20 - COMANDO CAMBIO IMMAGINE

8E-1560	Cambio immagine completo
8E-1563	Solenoide completo (precisare tensione)
8E-1563d	Asta con bottone
8E-1563f	Pomolo
8E-1563g	Raccordo flessibile
8E-1564	Nucleo
8E-1565	Prolunga nucleo
8E-1566	Tubo con flangia
8E-1568	Serranda
8E-1569	Attacco flessibile completo
8E-1570	Flessibile
8E-1573	Vite registro completa
8E-1573c	Molla registro
8E-1573d	Sfera
8E-1574	Rondella battuta
8E-1574a	Distanziale battuta
8E- 524	Condotto aria con guide
8E-1589	Bussola interruttore suono
8E-1590	Microinterruttore

FIG. 20 - COMMANDE CHANGE IMAGE

8E-1560	Change image complet
8E-1563	Solenoid complet (préciser tension)
8E-1563d	Tige avec bouton
8E-1563f	Poignée
8E-1563g	Raccord flexible
8E-1564	Noyau
8E-1565	Prolongation noyau
8E-1566	Tuyau avec bride
8E-1568	Serrande
8E-1569	Attache flexible complet
8E-1570	Flexible
8E-1573	Vis de réglage
8E-1573c	Ressort de réglage
8E-1573d	Bille
8E-1574	Rondelle butée
8E-1574a	Entretoise butée
8E- 524	Conduit d'air avec guides
8E-1589	Cage interrupteur son
8E-1590	Microinterrupteur

FIG. 20 - CHANGE OVER CONTROL

8E-1560	Picture change over assembly complete
8E-1563	Solenoid coil assembly (please specify voltage)
8E-1563d	Guide rod with knob
8E-1563f	Knob
8E-1563g	Bowden wire connection
8E-1564	Core
8E-1565	Core extension rod
8E-1566	Tube with flange
8E-1568	Shutter (Picture change)
8E-1569	Bowden clamp assembly
8E-1570	Bowden wire
8E-1573	Set screw assembly
8E-1573c	Brake spring
8E-1573d	Brake ball
8E-1574	Stop washer
8E-1574a	Stop spacer
8E- 524	Air duct complete with shutter guides
8E-1589	Sound switch bush
8E-1590	Microswitch

Pages 33/34 missing

Catalogue

V I C T O R I A 8

Spare parts

FOR 70/35 TYPE ONLY

VICTORIA 8 - FOR 70/35 TYPE ONLY

The mark ° indicates 35mm parts only.
The mark °° indicates 35/70mm parts only.
The letter Z indicates a gear, figures show number of teeth.

PLEASE ALWAYS, WHEN ORDERING SPARES, QUOTE THE SERIAL NUMBER OF THE PROJECTOR

VARIANTI 70/35

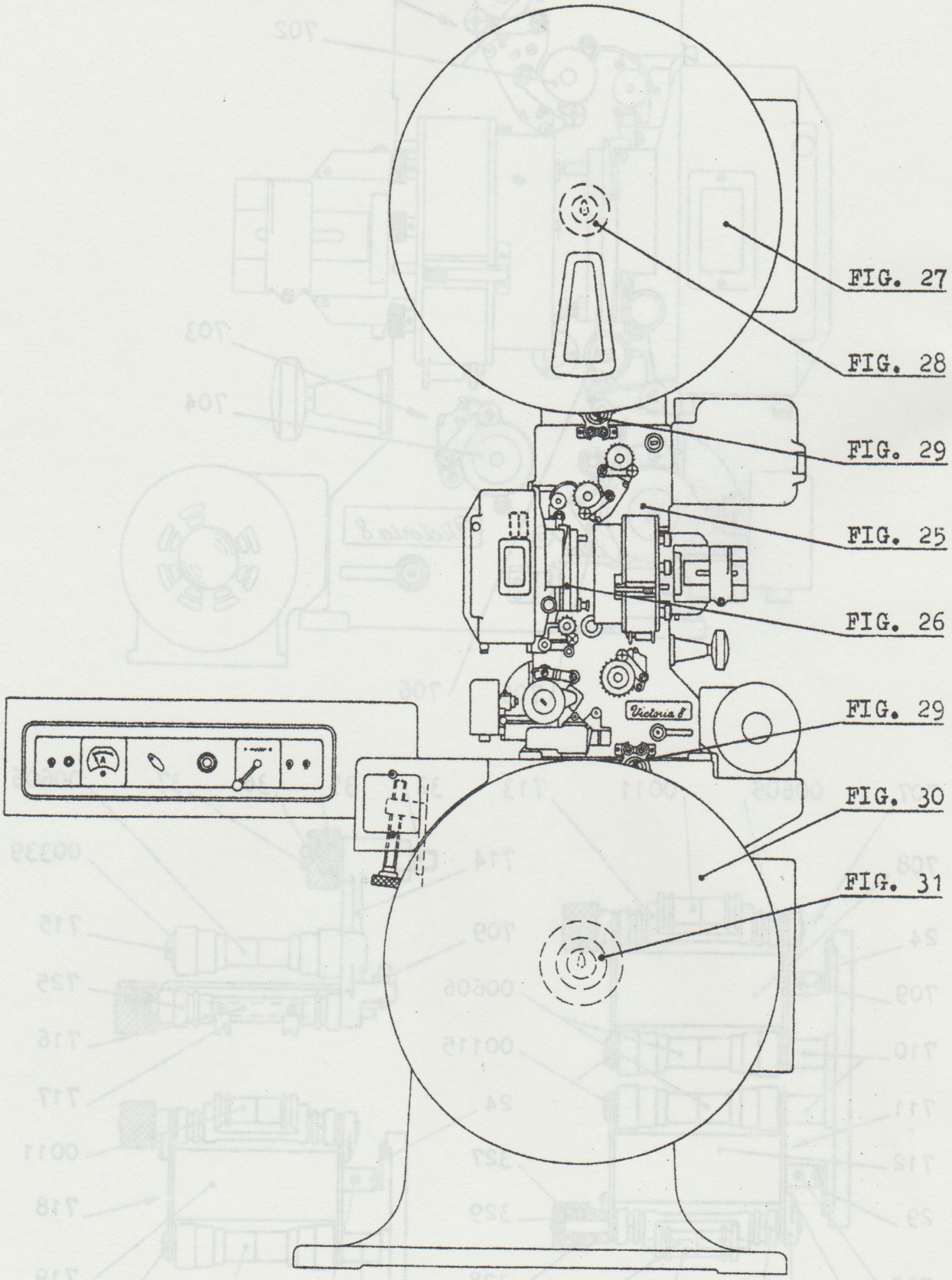

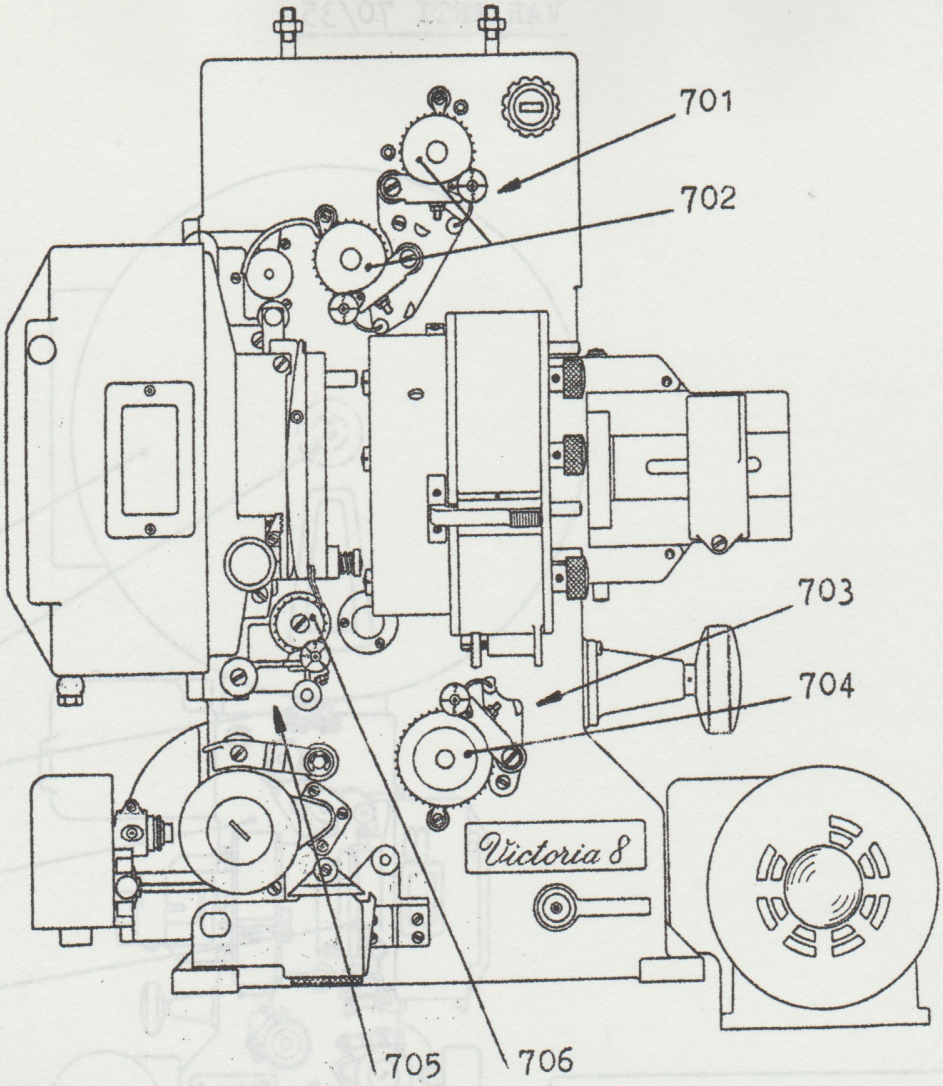
701
702
703
704
705
706
Victoria 8

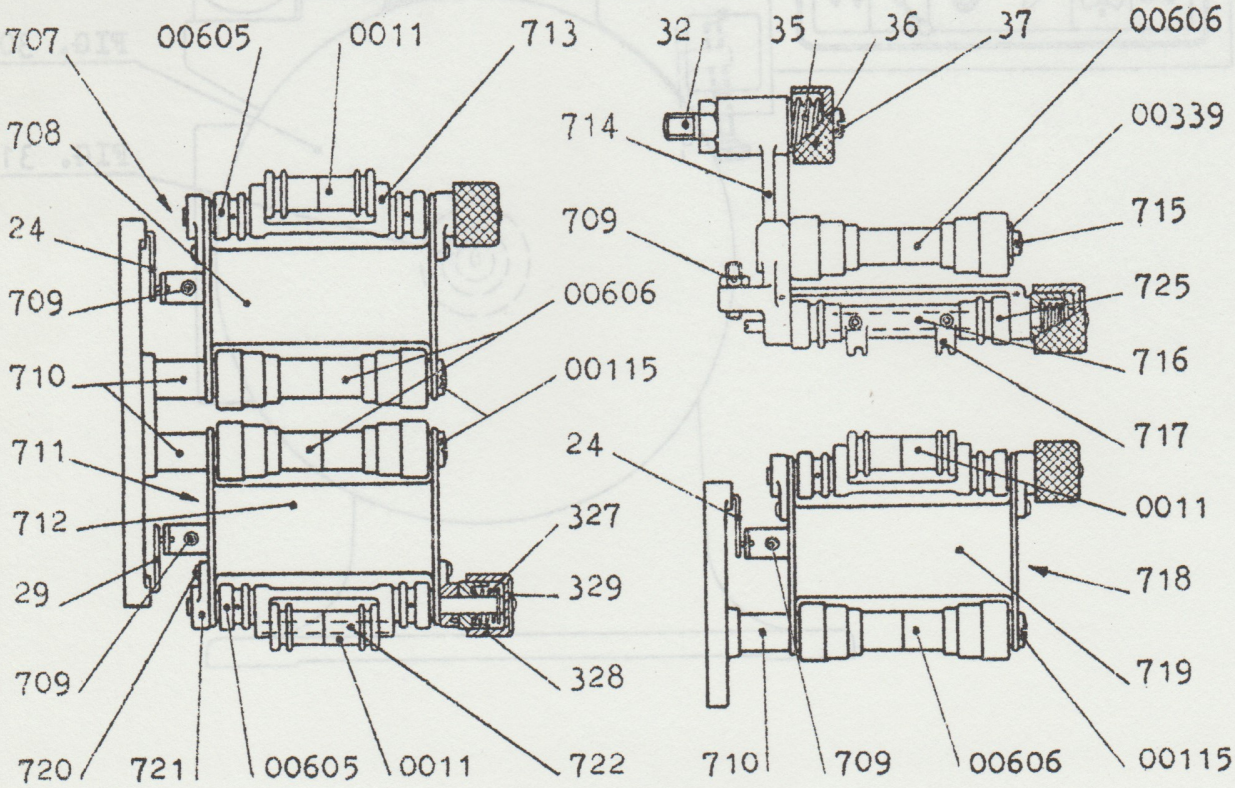
707
00605
0011
713
708
24
709
710
711
712
29
709
720
721
00605
0011
722
00606
00115
327
329
328
32
35
36
37
00606
714
00339
709
715
725
716
717
24
0011
718
719
710
709
00606
00115

FIG. 25

FIG. 25 - PROJECTOR (operating side)

0011	- Grooved roller (15mm O.D.)
00115	- Roller arm locking screw
00339	- Circlip securing rollers (8mm I.D.)
°°00605	- Grooved roller (14,5mm O.D.)
°°00606	- Plain roller (19mm O.D.)
24	- Pressure spring for top and bottom sprocket roller arm
29	- Pressure spring for intermediate sprocket roller arm
32	- Intermediate sprocket roller arm spindle assembly
35	- Intermediate sprocket roller arm spring
36	- Spring setting bush for the intermittent sprocket roller assembly
37	- Screw for bush
327	- Sprocket roller arm knob spring
328	- Sprocket roller arm knob
329	- Sprocket roller arm knob cover indicator
°°701	- Top and intermediate sprocket roller arm assembly complete with mounting plate
°°702	- Top and intermediate sprocket, 30-24 teeth (146)
°°703	- Bottom sprocket roller arm assembly complete with mounting plate
°°704	- Bottom sprocket, 40-32 teeth (108)
°°705	- Intermittent sprocket roller arm assembly complete with mounting plate
°°706	- Intermittent sprocket, 20-16 teeth (424)
°°707	- Top sprocket roller arm assembly
°°708	- Top sprocket roller arm only
°°709	- Sprocket roller arm setting screw
°°710	- Roller arm support spindle
°°711	- Intermediate sprocket roller arm assembly
°°712	- Intermediate sprocket roller arm only
°°713	- Roller eccentric shaft
°°714	- Intermittent sprocket roller arm only
°°715	- Spindle for plain roller 00606
°°716	- 35mm film guide shaft
°°717	- 35mm film guide
°°718	- Bottom sprocket roller arm assembly
°°719	- Bottom sprocket roller arm only
°°720	- Sprocket arm bush retaining screw
°°721	- Sprocket arm bush
°°722	- Spindle for grooved roller 0011
°°724	- Steel intermittent sprocket, 20 teeth (425)
°°725	- Grooved roller (14,8mm O.D.)

FIG. 26 - GATE BRACKET AND GATE FRAME

0040/9 - Insulating bush
0057/2 - Framing lamp holder assembly
00279 - Adjusting screw for spring guide roller
°°00607 - Spring guide roller assembly
182 - Gate bracket only
184 - Framing lamp 12 Volts - 5 Watts
186 - Spring for gate plate locking screw
187 - Gate plate locking screw
189 - Spring washer for part 742
190 - Latch for aperture plate
191 - Spring for aperture plate latch
193 - Air duct
196 - Water pipe union
197 - Gate latch arm
198 - Gate latch lever
203 - Gate frame support spring retaining knob
204 - Gate frame support spring
205 - Gate frame support
206 - Gate frame opening knob spring
211 - Gate frame opening knob with retaining screw
212 - Gate frame closing lever spring
213 - Gate frame closing lever
°°741 - Gate bracket assembly complete
°°742 - Upper pressure plate retaining screw
°°743 - 70mm standard aperture plate (47x20)
°°743bis - 70mm undersized aperture plate (43x16)
°°744 - Bracket for no. 00607 roller complete with screws
°°745 - Gate plate
°°745bis - Gate plate with velvet
°°746 - 70mm gate frame assembly complete
°°747 - 70mm gate frame only
°°748 - 70mm pair of pressure plates (4 pieces)
°°749 - Pressure pads spring bush
°°750 - Pressure pads spring
°°751 - Pressure pads spring knob
°°752 - Pressure pads assembly

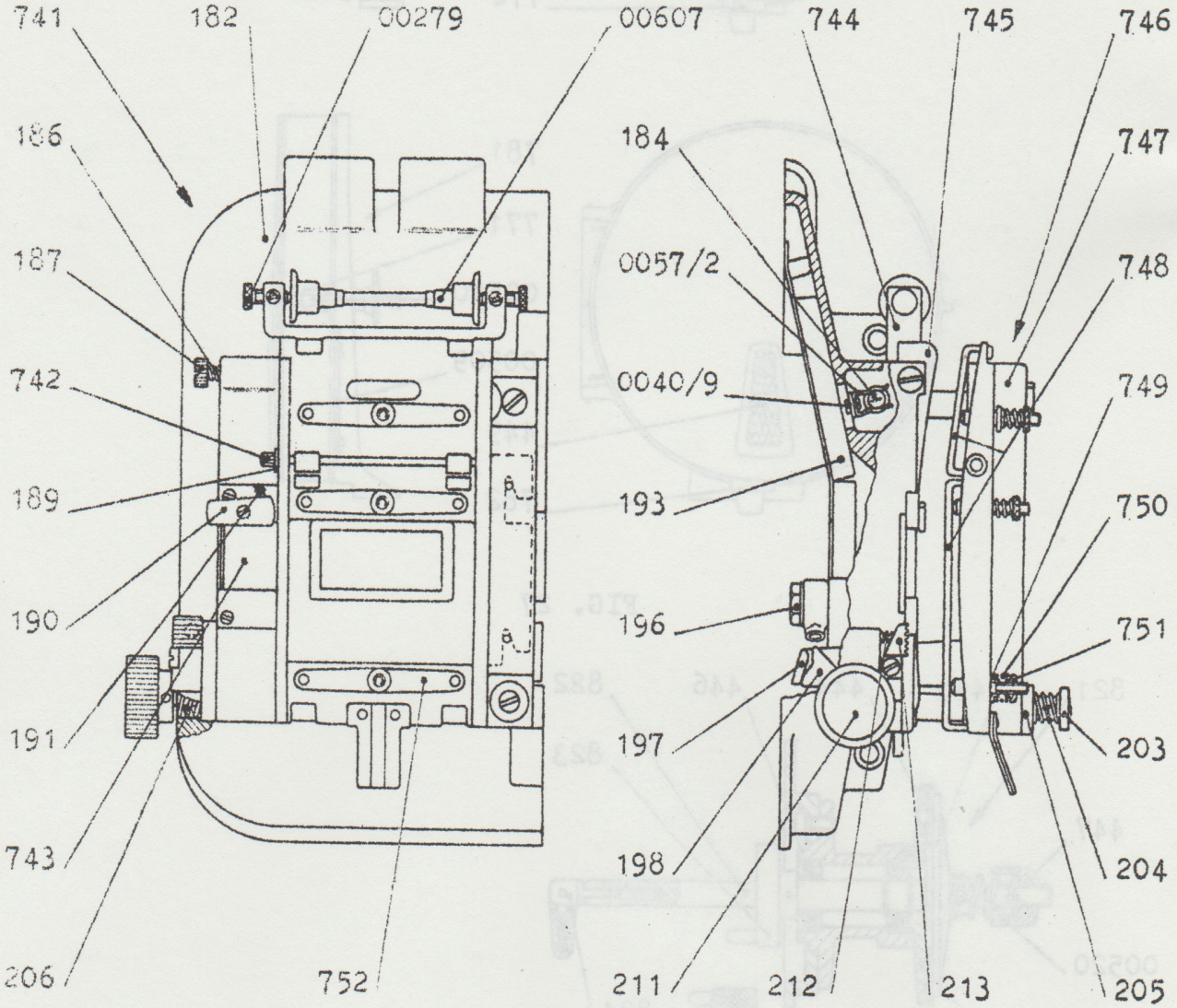
741
182
00279
00607
744
745
746
186
184
747
187
0057/2
748
742
0040/9
749
189
193
750
190
196
751
191
197
203
743
198
204
206
752
211
212
213
205

FIG. 26

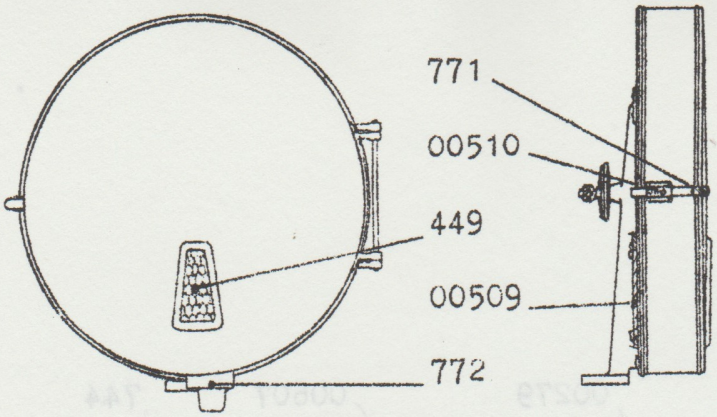

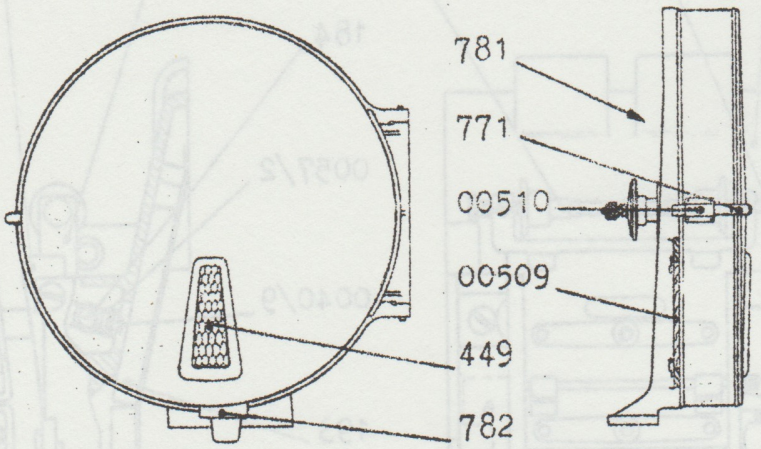

FIG. 27

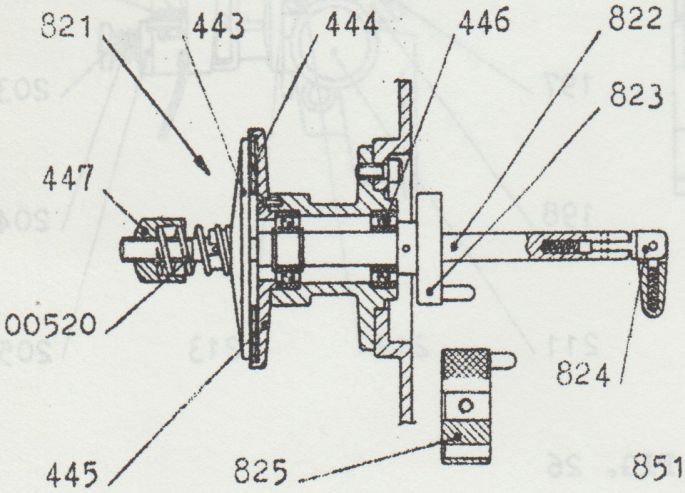

FIG. 28

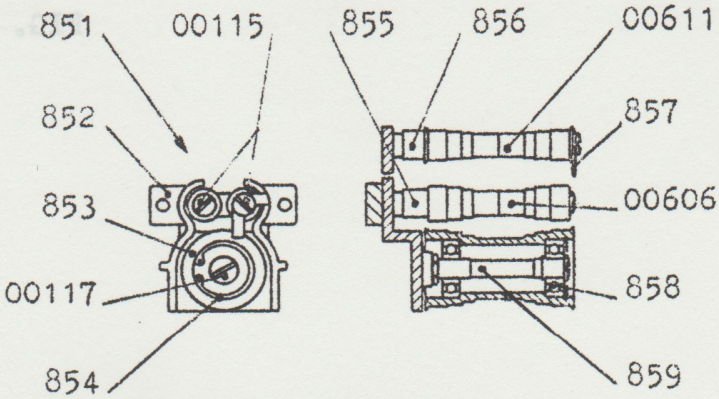

FIG. 29

FIG. 27 - TOP SPOOL-BOX, TOP AND BOTTOM FIRETRAPS (till serial number 8425)

00509 - Inspection window, rear
00510 - Spool-box catch bracket with spring
449 - Inspection window, front
°°771 - Spool-box catch
°°772 - Cover for top firetrap

FIG. 27 - TOP SPOOL-BOX (from serial number 8426)

00509 - Inspection window, rear
00510 - Spool-box catch bracket with spring
449 - Inspection window, front
°°771 - Spool-box catch
°°781 - Top spool-box complete, less clutch and shaft
°°782 - Cover for top firetrap

FIG. 28 - TOP CLUTCH

00520 - Clutch spring
443 - Clutch pressure plate
444 - Clutch insert (felt)
445 - Clutch disc, fixed
446 - Ball race
447 - Clutch spring tension nut
°°821 - Clutch and shaft complete
°°822 - Spool spindle with driving collar 12,7mm diameter
°°823 - Spool drive collar
°°824 - Double sneck assembly
°°825 - 35mm spool spacer

FIG. 29 - FIRETRAPS

00115 - Small roller securing screws
00117 - Large roller securing screw
°°00606 - Plain roller (19mm O.D.)
°°00611 - Flanged roller (18,5mm O.D.)
°°851 - Top and bottom firetrap assembly complete
°°852 - Firetrap frame only
°°853 - Large roller without ball race
°°854 - Circlip for large roller (30mm O.D.)
°°855 - Spindle for plain roller 00606
°°856 - Spindle for flanged roller 00611
°°857 - Firetraps safety plate
°°858 - Ball race
°°859 - Large roller spindle

FIG. 30 - BOTTOM SPOOL-BOX
(till serial number 8425)

00510 - Spool box catch bracket with spring
°°771 - Spool box catch
°°791 - Cover for bottom fire-trap

FIG. 30 - BOTTOM SPOOL-BOX
(from serial number 8426)

00510 - Spool box catch bracket with spring
°°771 - Spool box catch
°°801 - Bottom spool box complete, less clutch and shaft
°°802 - Cover for bottom firetrap

FIG. 31 - TAKE-UP

00520 - Clutch spring
443 - Clutch pressure plate
444 - Clutch insert (felt)
446 - Ball race
447 - Clutch spring tension nut
493 - Take-up toothed pulley
°°823 - Spool drive collar
°°824 - Double snek assembly
°°825 - 35mm spools spacer
°°831 - Take-up assembly complete
°°832 - Bush
°°833 - Spool spindle with driving collar, 12,7mm

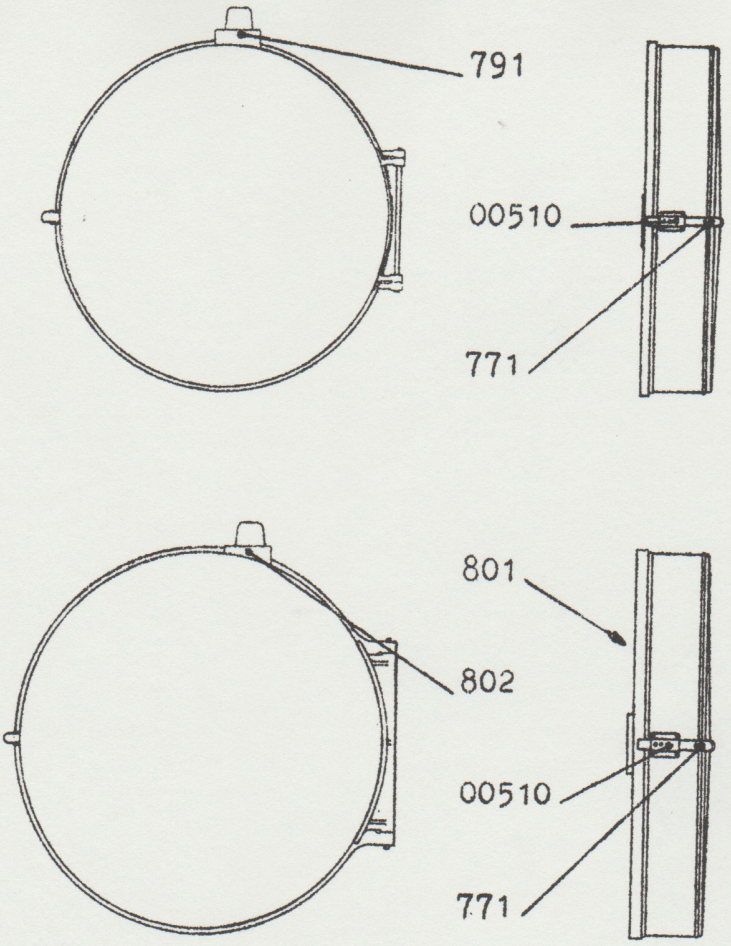
791
00510
771
801
802
00510
771

FIG. 30

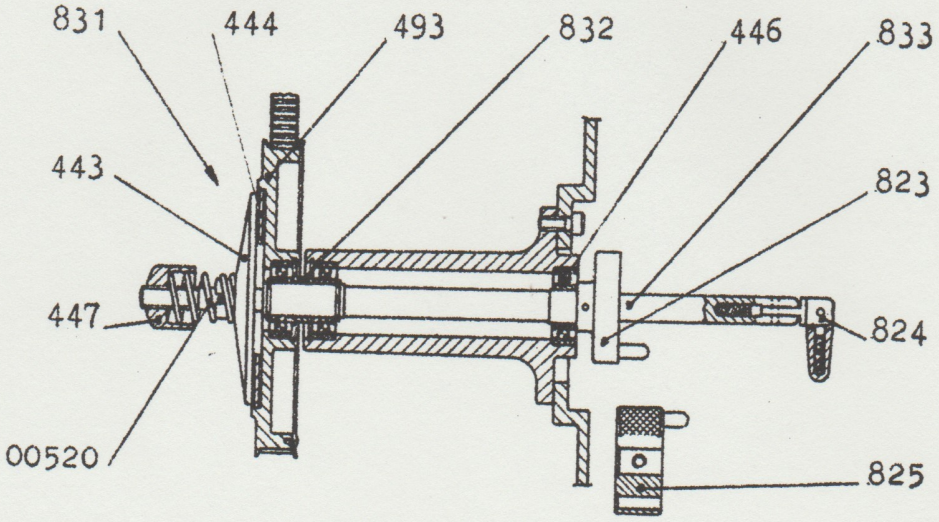
831
444
493
832
446
833
443
823
447
824
00520
825

FIG. 31

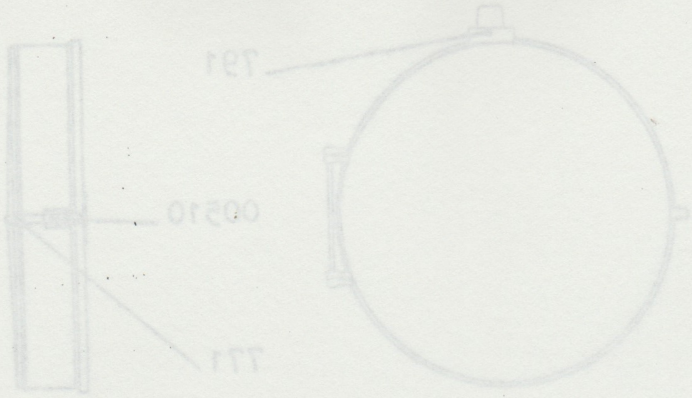
791
00510
771

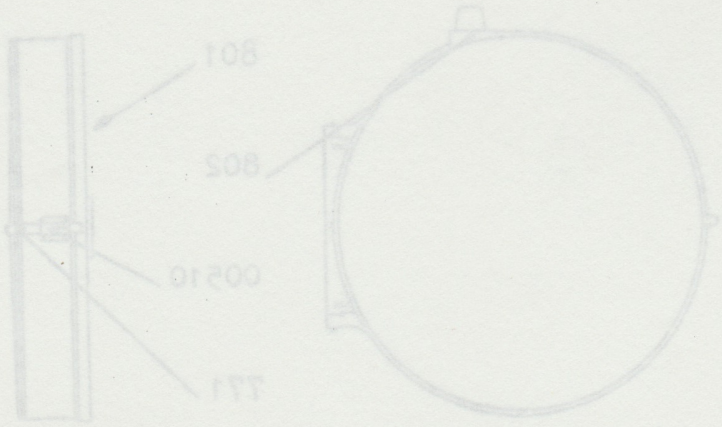
801
802
00510
771

FIG. 30

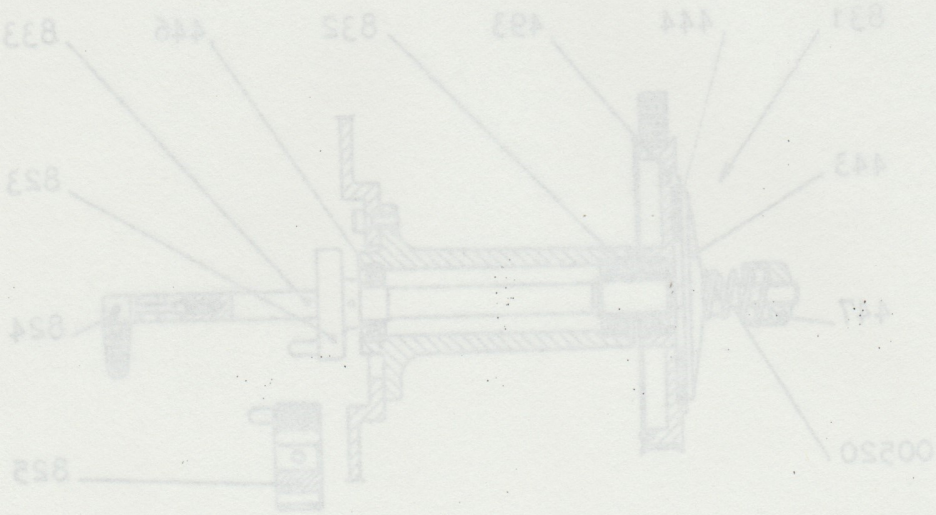
833
446
832
493
444
831
443
823
824
447
00520
825

FIG. 31

VICTORIA 8-70/35 PROJECTOR

How to interchange from 70 to 35 mm and vice-versa

The sketch represents the mechanism ready for 70 mm film threading.

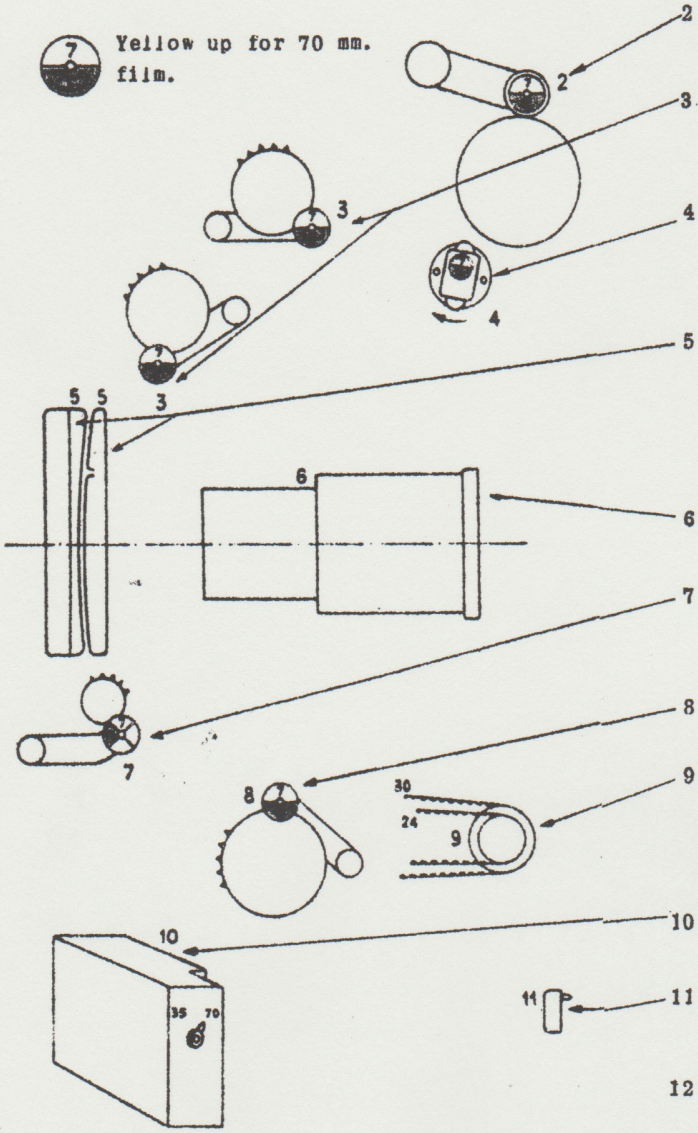

Interchange from 70 to 35 mm.

1 - Unloose the screw ⊕ of the two - coloured knobs to allow their free rotation.

2 - Turn half a turn the pressure roller knob of the magnetic head drum.

3 - Turn half a turn the roller arm knob of the upper and intermediate sprockets.

4 - Unloose the two knurled knobs of the magnetic cluster, turn half a turn the magnetic cluster, screw again the two knobs.

5 - Remove the 70 gate frame, the gate plate and the mask plate and insert the 35 corrugated frame, the mask plate guide, the gate plate, the gate frame and the 35 suitable mask plate.

6 - Mount the wanted lens.

7 - Turn a quarter of turn the roller arm knob of the intermediate sprocket.

8 - Turn half a turn the roller arm knob of the bottom sprocket.

9 - Reverse the motor pinion to obtain 24 frames per second speed (only if projector was running at 30 frames per second).

10 - Switch the magnetic preamplifier from 70 to 35.

11 - Insert the spacers in the spools spindles.

12 - Tighten the screws to block the two-coloured knobs.

After the interchange has been performed, carefully control that:
all the two-coloured knobs present the red up and
all the screws ⊕ have been duly tightened

Interchange from 35 to 70

Perform same operations vice-versa, i.e.: unloose the screws ⊕ , rotate all the two-coloured knobs and the magnetic cluster in order that they present the yellow up. Remove the gate frame, the gate plate, the mask plate guide, and the corrugated frame. Insert the gate plate, the gate frame and the 70 mask plate. Mount the wanted lens. Change speed if required. Switch the magnetic preamplifier from 35 to 70. Take away the spacers from the spools spindles.

After the interchange has been performed, carefully control that:
all the two-coloured knobs present the yellow up and
all the screws ⊕ have been duly tightened.

VICTORIA 8-70/35 PROJECTOR

How to interchange from 70 to 35 mm and vice-versa

The sketch represents the mechanism ready for 70 mm film threading.

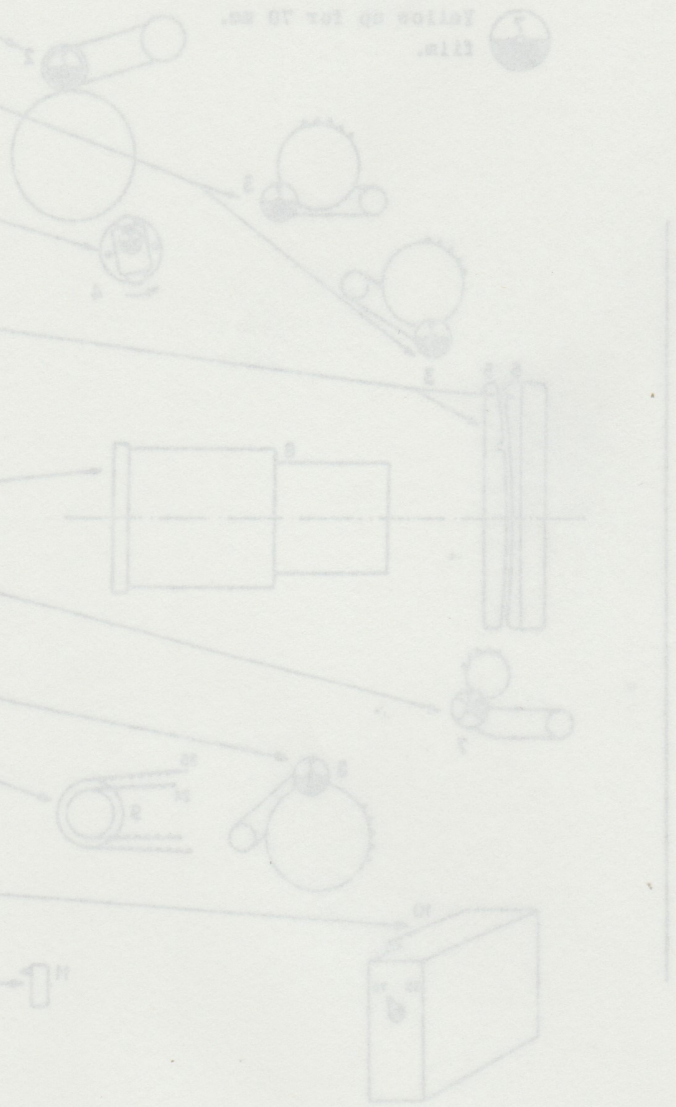

Interchange from 70 to 35 mm.

1 - Unloose the screw ⊕ of the two-coloured knobs to allow their free rotation.

2 - Turn half a turn the pressure roller knob of the magnetic head drum.

3 - Turn half a turn the roller arm knob of the upper and intermediate sprocket.

4 - Unloose the two knurled knobs of the magnetic cluster, turn half a turn the magnetic cluster, screw again the two knobs.

5 - Remove the 70 gate frame, the gate plate and the mask plate and insert the 35 corrugated frame, the mask plate guide, the gate plate, the gate frame and the 35 suitable mask plate.

6 - Mount the wanted lens.

7 - Turn a quarter of turn the roller arm knob of the intermediate sprocket.

8 - Turn half a turn the roller arm knob of the bottom sprocket.

9 - Reverse the motor pinion to obtain 24 frames per second speed (only if projector was running at 20 frames per second).

10 - Switch the magnetic preamplifier from 70 to 35.

11 - Insert the spacers in the spocis spindles.

12 - Tighten the screws to block the two-coloured knobs.

After the interchange has been performed, carefully control that:
all the two-coloured knobs present the red up and
all the screws ⊕ have been duly tightened

Interchange from 35 to 70

Perform same operations vice-versa, i.e.: unloose the screws ⊕, rotate all the two-coloured knobs and the magnetic cluster in order that they present the yellow up. Remove the gate frame, the gate plate, the mask plate guide, and the corrugated frame. Insert the gate plate, the gate frame and the 70 mask plate. Mount the wanted lens. Change speed if required. Switch the magnetic preamplifier from 35 to 70. Take away the spacers from the spocis spindles.

After the interchange has been performed, carefully control that:
all the two-coloured knobs present the yellow up and
all the screws ⊕ have been duly tightened.

Undersize Mask Plate Apertures

Undersize mask apertures are supplied for 35mm. ratios so that corrections can be made after the projectors have been correctly set in position and the position of the screen finalised, curtains arranged, which should all be carried out using test film.
With the film correctly focussed on the screen (it is the film which is focussed and not the outline of the mask aperture), arrangements can be made to file the mask plates to compensate for any keystoning of the image which may occur due to projection angles on the vertical side lines of the mask aperture and any curvature distortion which may occur on the horizontal lines due to the use of curved screens.
Careful adjustment of the mask plates by filing will enable a completely uniform frame to be projected.

Frame dimensions for different ratios are as follows:

Aspect	Ratio	Film		Mask Plates	
		width	height	width	height
Normal	1.37:1	20.96	15.24	20.5	14.8
Wide screen	1.66:1	20.96	12.62	20.5	12.3
	1.75:1	20.96	12	20.5	11.7
	1.85:1	20.96	11.33	20.5	11
CinemaScope	2.35:1	21.37	18.16	20.8	17.5
	2.55:1	23.16	18.16	22.5	17.5
70mm. Film	2.2:1	48.56	22	47	20
				43	16

Change over Control (Fig. 18 - 19 - 20)

To change over picture and sound from one machine to the other, lift the safety dowser (19B) which will operate two micro-switches. One micro-switch (19A) will change over the picture and cause the safety dowser to drop on the outgoing projector, the other (19C) will change over the sound by operating the relay fitted in the change over box.
For projectors supplied with change over control (ZIPPER) (Fig. 20) to change over from one machine to the other, lift the safety dowser (19B) and push the button (20H) which will operate the Solenoid (20F) lift the safety dowser (20G) and operate the sound micro-switch (20E) fitted in the change over box.
The external control knobs are only used in case of an emergency.
After making a changeover, check that picture and sound are satisfactory, close lamphouse dowser on outgoing projector and switch off.

ADJUSTMENTS

Adjustments to be carried out are the same both for 35mm. and 70mm. projection.

Pads Pressure (Fig. 16)

All pressure applied to the film should be kept to an absolute minimum and should not exceed that necessary to keep a steady picture.

For 35 mm. Film

On the 35mm. gate, screw (16D) adjusts the pressure of the four gate runners onto the film, Turning this screw clock-wise will increase pressure. The engraved numbers are only used as references.

For 70mm. Film

The 70mm. gate knurled nuts (16G-H) adjust the spring tension applied to the pressure pads.
The top knurled nut (16G) adjusts the runners controlling the film entering the gate.

Optical and Magnetic Damper (Fig. 23)

Whilst running projector check loops are as for Diagrams shown (Fig. 23).

Optical

Rotate screw (22R) until the lower edge of the damper cone (23P) is in line with the top of the gauge (23 I).

Magnetic

Adjust the control knob (23B) until the axis of the roller (23A) is in line with the red spot (23C).

Sound Synchronisation

35mm. Optical Film

The synchronisation distance between picture and sound is 20 frames. The sound preceeding the picture.

35mm. Magnetic Film

The picture to sound synchronisation distance is 28 frames. The sound following the picture.

70mm. Film

The picture to sound synchronisation distance is 24 frames. The sound following the picture.

The sound synchronisation roller (10F) on the magnetic soundhead permits the synchronisation distance to be adjusted.
Loosening the screw the roller arm assembly can be rotated to shorten or lengthen the film path. The film can be laced also as marked on the soundhead cover to secure standard synchronisation.

DEFECTS - CAUSES

Projector motor does not start

- Master switch open
- Safety device open
- Motor starter contacts are dirty or defective
- Starter fuses blown or resistances burnt out

Film breakage or damage

- Upper clutch to be adjusted
- Bottom clutch to be adjusted
- Entrance and output gate loops too short
- Incorrect film threading
- Locked rollers and roller arm assemblies without clearance
- Defective or incorrectly aligned film sprockets
- Unsuitable spool hub

Lack of sound synchronisation

- Incorrect film threading
- Film lacing on the magnetic soundhead to be adjusted with the 2 roller arm assemblies

Sound flutter

- Varying film speed
- Oil dampers out of adjustment or lacking oil
- Soundhead flywheel does not turn regularly
- Pressure pads to be checked
- Optical soundhead objective lens to be cleaned

Noisy film operation

- Gate entry and lower loop to be corrected
- Gate pressure plates to be adjusted or to be cleaned

Noisy projector operation

- Lubrication to be checked
- Slack screws on the covers
- Belt mis-aligned

Safety device does not close

- Lamphouse dowser left open
- Pieces of film have jammed the lever

REPLACEMENT OF THE INTERMITTENT UNIT (Fig. 25)

In the unlikely event that it should prove necessary to replace an Intermittent Unit, the instructions set out herewith, if followed closely, will enable an exchange to be carried out quickly and efficiently.

First, remove the Gate Bracket and the Gate Plate. Turn the Projector slowly by hand until the Intermittent Sprocket is in the 'locked' position and then remove it from the spindle. Remove the Intermittent Sprocket Roller Arm Assembly (25M), Steel Circlip for Collar (25L), the Roller Arm Stop Collar (25G), Clutch Spring Bush (25H), Clutch Spring and Plate (25F) the Screw Cover (25D) and the Holding Screw (25E) with washer.

If fitted, remove the Magnetic Preamplifier which in turn will allow the rear Main Cover of the Projector to be removed complete with Blower Motor Assembly.

Slacken off the Screw Locating the Racking Shaft (25B) and draw this forward until the end of the Shaft disengages with the rear Bearing inside the Projector housing. When carrying out this operation note the position of the red marker dot (25A).

Rotate the Intermittent Unit until this is clear of the Gear Train then withdraw from the mechanism body.

The replacement Intermittent Unit must first be set so that the Intermittent Sprocket Spindle is in the "locked" position and should then be inserted into the main casting turned until such time as the drive gear is meshed with the driving gear. The unit may then be locked with Screw (25E). Re-set the Framing Control Spindle, then the Clutch Disc (25F) ensuring that the red spot on the disc and the red spot on the Main Casting are in line. Re-place the spring and the spring bush (25H) which should be screwed up tightly then unscrewed 1/4 of a turn.

Without running the projector, check the Framing Movement, operating this to the extreme Full Rack Top Position and the Extreme Full Rack Bottom Position, rotating the mechanism by using the Inching Knob on the Motor whilst this Rack check is being carried out to ensure that the mechanism rotates freely, irrespective of the position of the Racking Movement.

Re-assemble the screw cap (25D) the Roller Arm Assembly Spring, the Stop Collar with Ring, the Roller Arm Assembly (25M), re-adjusting the tension on the roller arm. Replace the Intermittent Sprocket. Locate the Key Washer in the groove cut in the Sprocket Spindle and lock with the Fixing Screw.

Replace the rear Cover of the Projector and if fitted the Magnetic Preamplifier Assembly.

Should the Shutter be out of Phase, rotate the Intermittent Sprocket until the point is reached when the movement of the film is about to commence. Slacken the Shutter Holding Screws (18P) and move the Shutter Blade round to a position to correspond with the Bottom line of the Aperture (18N) and lock the screws.

The Shutter rotates clockwise when viewed from the Lamphouse position. When running a test film, (for instance C.T.C.) should travel 'ghost" appear on the top of the picture, move the shutter forward in a clock-wise direction. If Shutter travel 'ghost' appears on the bottom, move the Shutter anti-clockwise.

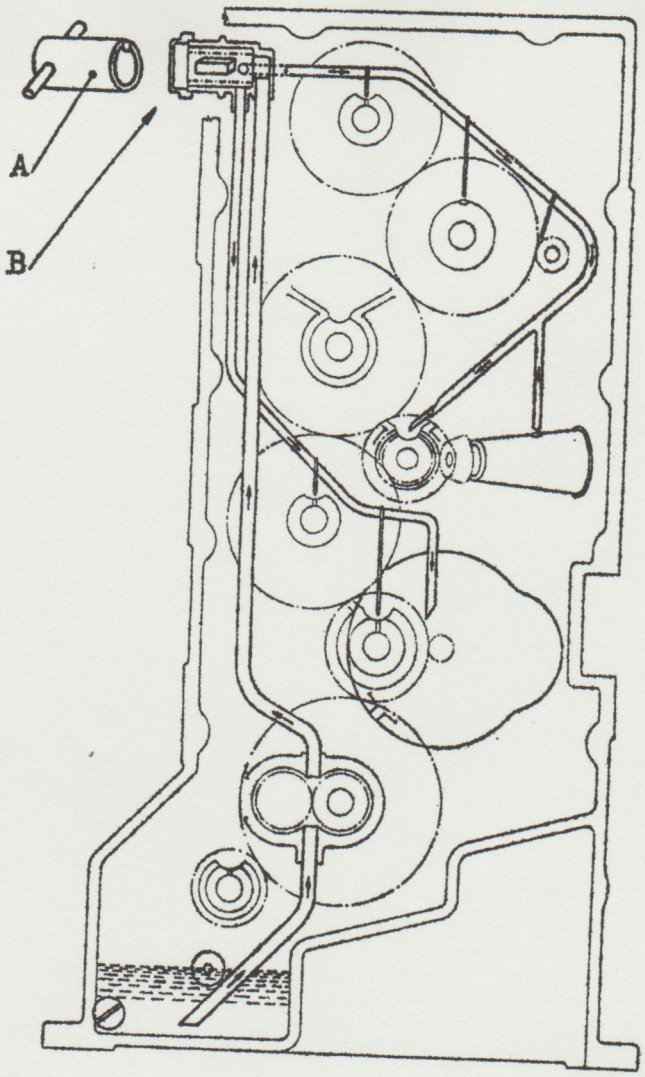

FIG. 21

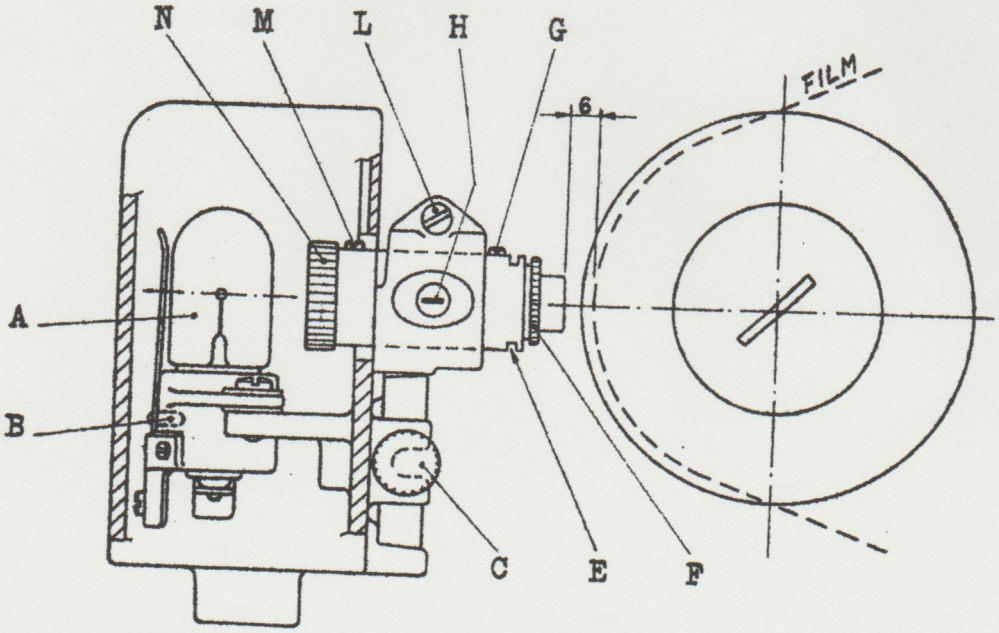

FIG. 22

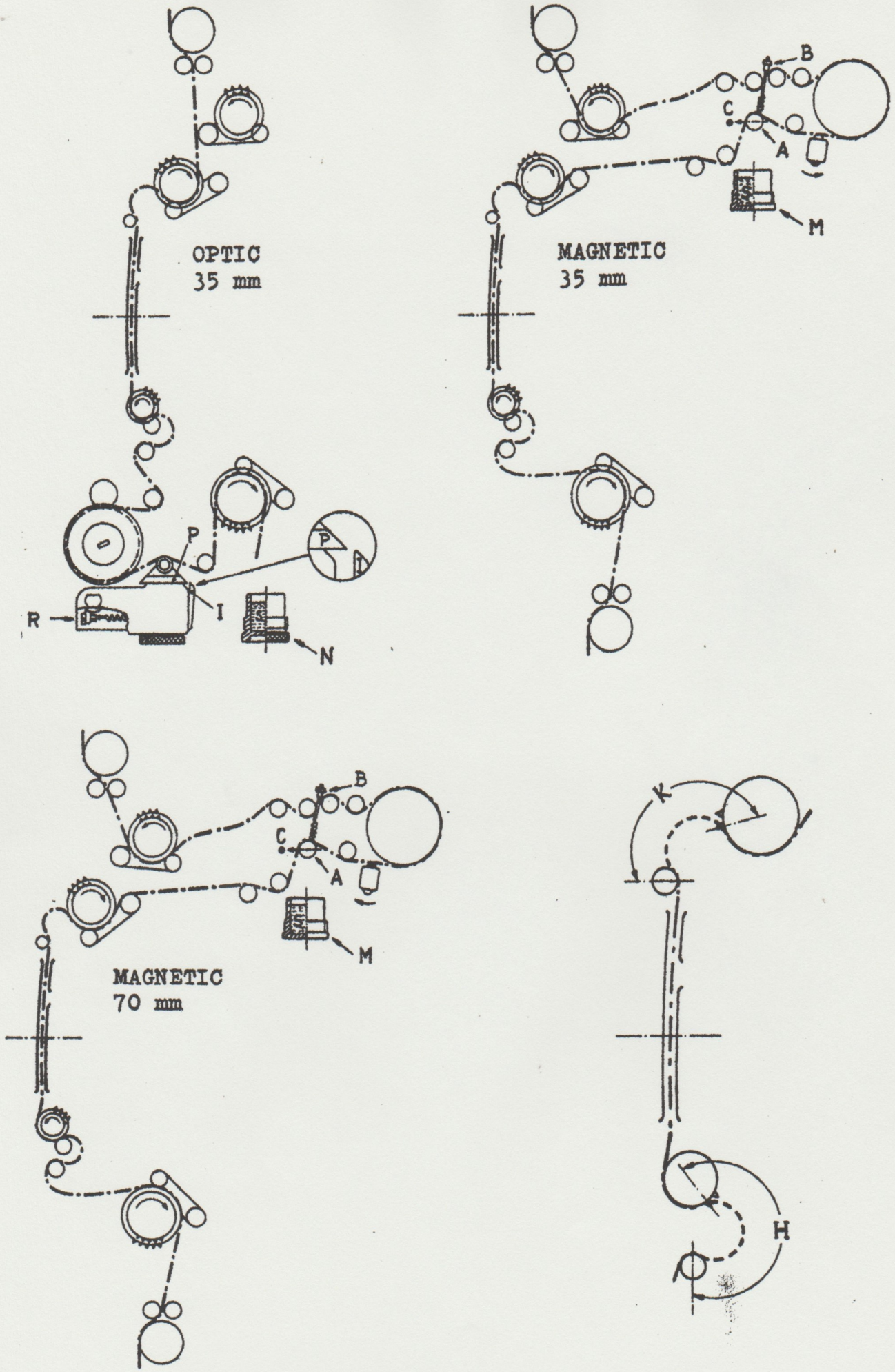

FIG. 23